Installation Guide

Service Line Installation Standards

November 11, 2026

Preface

The information presented in this manual is provided as a guide to those installing, inspecting, and testing plastic natural gas service lines within the Peoples' service territory.

The most current version of this manual can be found on the Peoples website at the following addresses:

www.peoples-gas.com/plumbers

The requirements set forth in this manual are intended to ensure compliance with Title 49 of the Code of Federal Regulations (CFR) Department of Transportation Part 192, "Transportation of Natural Gas and Other Gas by Pipeline: Minimum Federal Safety Standards" (49 CFR 192), Peoples' Policies and procedures, and local building codes. However, it should be noted that the information presented is not intended to address all local code requirements.

Failure to adhere to the following guidelines may result in forfeiture of installation privileges in Peoples' service territories.

Revision History

This most current version of this manual replaces all prior installation instructions.
Issue Date: February 24, 2009

Revision Date: April 1, 2010

Revision Date: November 27, 2012

Revision Date: May 2, 2014

Revision Date: May 28, 2014

Revision Date: June 24, 2014

Revision Date: September 22, 2014

Revision Date: October 27, 2014

Revision Date: March 3, 2015

Revision Date: January 29, 2016

Revision Date: April 6, 2016

Revision Date: August 14, 2017

Revision Date: October 16, 2019

Revision Date: November 10, 2020

Revision Date: November 1, 2021

Revision Date: December 20, 2022

Revision Date: January 27, 2023

Revision Date: September 30, 2024

Revision Date: April 28, 2025

Revision Date: November 11, 2026

Table of Contents

1. Service Line Installer Requirements 6
a) Operator Qualification 6
b) Drug and Alcohol Programs 8
2. APPROVED MATERIALS 9
a) Plastic Pipe for Systems Operating at 500 SCFH or Less 9
b) Riser Specifications 11
c) Locator Wire and Warning Tape 11
d) Service Head Adapters 12
e) Houseline 13
3. Plastic Pipe Sizing Requirements 13
a) Determining Load 13
b) Using the Charts 14
c) Chart Calculations 14
4. Installation Requirements 15
a) General Requirements 15
b) Installation Techniques 17
c) Application Specific Installation Requirements 19
d) Meters and Regulators 20
e) House Lines 21
5. Pressure Testing Procedures 22
a) Service Line Pressure Testing Procedures 22
6. Requesting Connection (Tie-In) to the Peoples Distribution System 23
a) Serve Installation Record (SIR Form) 23
7. Inspection and Tie-In 24
a) Completed SIR Form 24
b) Arrival of Peoples Representative 24
c) New Construction 24
d) Non-Emergency 25
8. Re-establishing Gas Service after a Buried House Line Leak 25
Appendix 1 Pipe Sizing Charts 26

Appendix 2 Weak Link Chart 38
Appendix 3 Application Specific Installation Diagrams 40
Appendix 5 Standard Service Line Spotting Practices 45
Appendix 6 Meter Installation Measurements 51
Appendix 7 Welding Guidelines 61

1. Service Line Installer Requirements

a) Operator Qualification

i. Federal Pipeline Regulations, 49 CFR Part 192, require that ALL individuals conducting replacement, renewal, maintenance, and repair activities on pipeline facilities, to include the customer service line, be "Qualified" to perform the tasks. To be "Qualified," the individual must be evaluated to assure they are capable of performing the tasks properly and safely, in accordance with Peoples' procedures, utilizing approved materials. Further, they must be able to properly recognize and react to any abnormal operating condition they may encounter while performing these tasks. The qualifications associated with service line work include a variety of covered tasks, for which Peoples has determined three years is the appropriate re-qualification interval. However, Federal Pipeline Safety Regulations dictate a one-year interval for joining of plastic pipe. Therefore:

   (1) A Service Line Installer (SLI) must qualify in all covered tasks initially and at least every three years.

   (2) Peoples' service line qualification program includes a qualification to join plastic pipe using mechanical (stab and compression) fittings. 49 CFR 192.281 - .287 addresses plastic pipe joining and requires each operator to establish a method to determine "that each person making joints in the operators system is qualified in accordance with this section". This task has an annual re-qualification requirement. SLI's will need to re-qualify annually and remain in good standing with this requirement or they will be removed from the approved SLI's listing.

ii. Currently, Peoples has authorized the following third parties to perform qualification evaluations for work in its service territory:

   (1) Utilities Technology International (UTI)
   Phone: 1-614-482-8080
   www.uti-corp.com/training.html

   (2) Professional Utility Resources (PUR)
   Phone: 1-216-870-2707
   www.pur-co.com

   To schedule for an evaluation, please contact one of the above listed evaluators for information regarding their next session in your area.

iii. The DOT Federal Pipeline Safety Regulations governing Operator Qualification apply to work upstream of the meter. Plumbers and contractors performing work on customer-owned houseline downstream of the meter are not covered by the Operator Qualification requirements, though they are subject to the requirements of the National or International Fuel Gas Code (See drawing below).

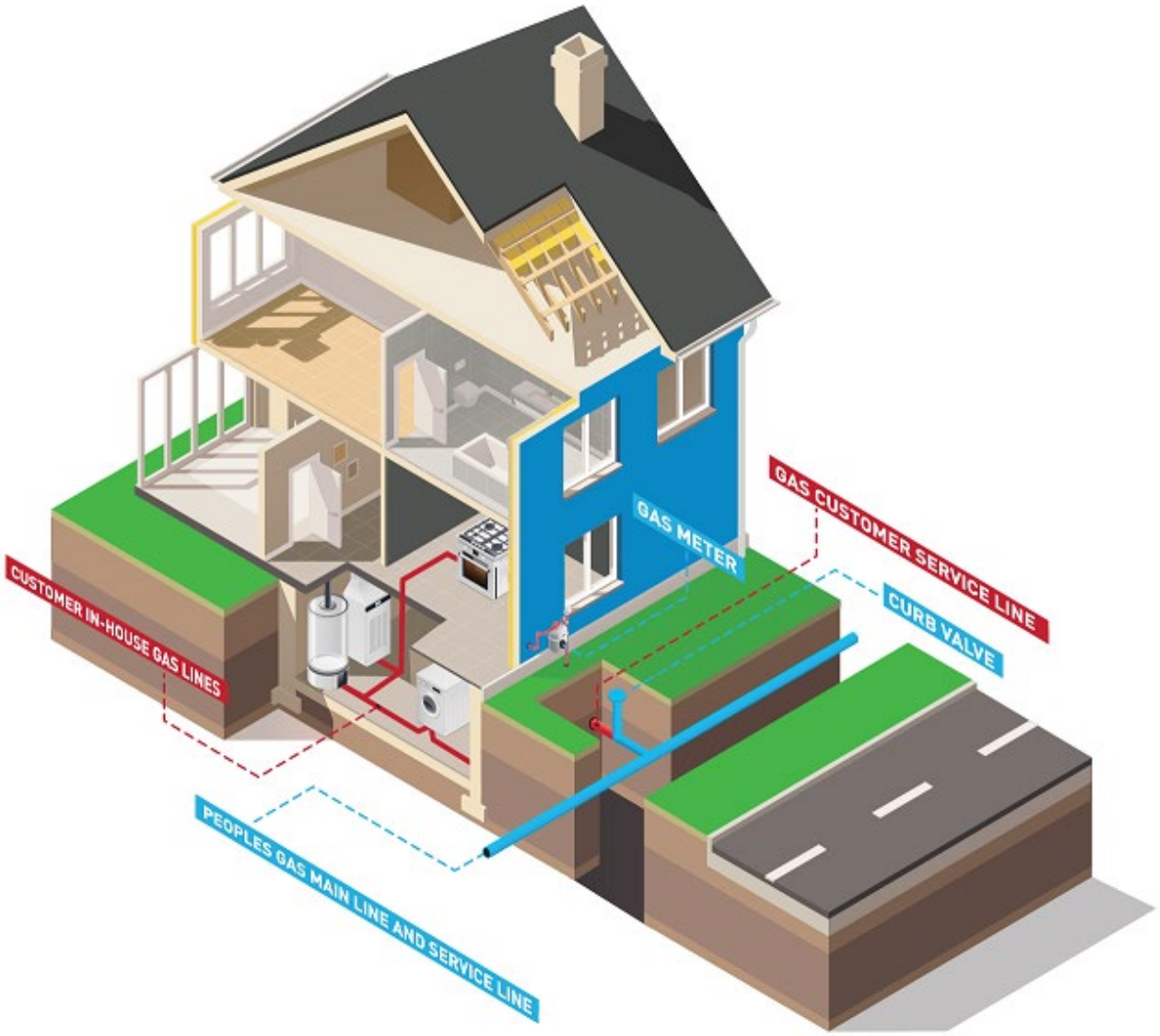

b) Drug and Alcohol Programs

i. Department of Transportation - Pipeline and Hazardous Materials Safety Administration's (DOT- PHMSA), 49 CFR Part 199 regulations also require all persons performing pipeline related work to be enrolled in an approved Drug and Alcohol Testing Program.

ii. There are several components required in order to comply with the regulations regarding Drug and Alcohol Programs. Some examples are:

(1) A DOT-PHMSA Anti-Drug and Alcohol Misuse Prevention Plan
(2) Pre-employment and random testing for prohibited substances
(3) Post-accident and reasonable cause testing for alcohol and prohibited substances
(4) Training
(5) Recording keeping
(6) Employee Assistance Program (EAP)

iii. While some contractors are known to self-administer their company's drug and alcohol program, the majority joins a consortium in order to comply with these Drug and Alcohol testing requirements. There are several available to provide the administration of these regulatory requirements. Although we do not endorse one consortium, below is a listing of several national consortia. Please contact them by phone or mail, if interested.

Pipeline Testing Consortium, Inc.
9 Compound Drive
Hutchinson, KS 67502
Phone: 1-800-294-8758

Spectrum Medical Services, Inc.
6505 Mars Road
Cranberry Township, PA 16066
Phone: 1-800-253-5077

Bem Enterprises, Inc.
145 Eagle Avenue
Indiana, PA 15701
Phone: 1-800-862-2191

I.E.B.T. Corporation
P.O. Box 266
Mogadore, OH 44260
Phone: 1-800-628-5106

D.D.T.A. Services, Inc.
P.O. Box 461
East Palestine, OH 44413
Phone: 1-800-488-3382

D.D.T.A. Services, Inc.
P.O. Box 461
East Palestine, OH 44413
Phone: 1-800-488-3382

Substance Abuse Management, Inc.
500 North 19th Street
Milwaukee, WI 53233
Phone: 1-800-247-7264

Advantage Resources
Route 30 East
10 Oakley Park
Greensburg, PA 15601
Phone: 1-724-600-0180

Ameritest
1221 Granville Pike
Lancaster, OH 43130
Phone: 800-782-8378

Integrity Verifications, Inc.
7515 Pearl Road
Cleveland, OH 44130
Phone: 1-800-914-2659

iv. Peoples has contracted with *Veriforce* to provide oversight of contractor operator qualification and SLI Drug & Alcohol programs. Whether you self-administer or join a consortium, your plans and testing data must be reviewed and approved by *Veriforce*.

(1) Steps to Getting Started in a DOT-PHMSA Anti-Drug and Alcohol Misuse Program:

- Make the decision to self-administer or join a consortium.
- Obtain written PHMSA Anti-Drug and Alcohol Misuse Plans.
- Forward copies of your company's PHMSA Anti-Drug and Alcohol Misuse Plans to *Veriforce* (Peoples' Drug and Alcohol Monitoring Service) for review.
- *Veriforce* will review the program documents and notify Peoples of your status when satisfactory.

(2) If you have questions or need additional information contact:

Veriforce
Drug and Alcohol Division
19221 I-45 South, Suite 200
Shenandoah, TX 77385
Toll Free: 800.426.1604 x32
Email: drugalc@veriforce.com

2. APPROVED MATERIALS

Please note that Peoples prefers and recommends that services are constructed of plastic materials when possible. Peoples approved materials are available from MRC Global, as well as other plumbing suppliers. Please refer to pipe sizing charts (pages 27-37) prior to service installation to ensure adequate gas capacity.

Standard cubic feet gas per hour (SCFH) =1 cubic foot or natural gas at 60º F, 1,000 BTU's at 7 inches water column pressure at sea level.

---

a) Plastic Pipe for Systems Operating at 500 SCFH or Less

i. New Services or renewed services

(1) Systems Operating at 5 – 125 psig:
- 1/2" CTS .090W PE4710 Coiled

(2) Systems Operating a 0 – 60 psig:

- 1" CTS .099W PE2708 Coiled
- 1-1/4” IPS DR 10 PE2708 Coiled
- 2” IPS DR11 PE 2708 Coiled or Stick

(3) Systems Operating at 0 – 125 psig:

- 1" CTS .101W PE4710 Coiled
- 1-1/4" CTS .121W PE4710 Coiled
- 2” IPS DR 11 PE 4710 Coiled or Stick

(4) Larger pipe sizes installed per Peoples’ main line requirements.

ii. Renewed Services

(1) Systems Operating at 5 – 125 psig:

- 1/2" CTS .090W PE3408/4710 Coiled

(2) Systems Operating at 0 – 60 psig:

- 1" CTS .099W PE 2708 Coiled
- 1-1/4” IPS DR 10 PE 2708 Coiled
- 2” IPS DR11 PE 2708 Coiled or Stick

(3) Systems Operating at 0 – 125 psig:

- 1" CTS .101W PE 4710 Coiled
- 1-1/4" CTS .121W PE 4710 Coiled
- 2” IPS DR 11 PE 4710 Coiled or Stick
- Larger pipe sizes installed per Peoples’ main line requirements.

(4) Larger pipe sizes installed per Peoples’ main line requirements.

iii. Peoples approved plastic pipe manufacturers:

- Performance Pipe DriscoPlex® – All standards
- US Poly Company (Uponor) – All standards
- Polypipe by Dura-Line – All standards
- Charter Plastics – All standards
- Oil Creek Plastics – All standards
- J.M. Eagle – All standards

Note: As of March 6, 2015, medium-density (PE 2708 yellow) polyethylene plastic pipe over three years old and/or high-density (PE 4710 black) polyethylene plastic pipe over ten years old from date of manufacture, is not suitable for use in the Peoples’ pipeline system.

b) Riser Specifications

i. Anodeless Meter Riser

(1) 1” MPT (Male Pipe Thread) OR 1-1/4” MPT, Outlet to match meter set, Inlet to match plastic service line standard.
- Use bracket or remote post for support

ii. The following are the names of manufacturers whose materials meet Peoples’ riser specifications:
iii. Factory fit; carrier pipe is installed by the manufacturer
iv. Field fit: carrier pipe is installed by the plumber or installer

(1) Honeywell/Perfection Corporation – All sizes (both factory and field fit)
(2) Continental – Anodeless (Rigid) Meter Risers only - All sizes (factory fit only)
(3) Energy Control Systems –All sizes Anodeless Flexible and Rigid Meter Risers (factory fit only)
(4) Central Plastics – Factory Fit

c) Locator Wire and Warning Tape

Peoples’ current Locator wire installation requirements are as follows:

i. Locator Wire

(1) Use continuous lengths of approved Locator wire.
- # 8 AWG (or larger diameter) solid copper wire with yellow thermoplastic coating.
  - Peoples Part # 44000740
  - MRC Global Part # 6331-0801

ii. Wire Connectors

(1) Must be manufactured for use below ground and in wet locations and be appropriate for the size and number of wires being connected.
- Wire Nuts
  - Connector, Locator Wire, # 8 AWG w/ Corr Inhibitor for Underground and Wet Locations, Yellow, DryConn P/N 31556
  - Peoples Part # 42111954
  - MRC Global Part # 8816-4750

- Bonding Lugs
  - Connector, Locator Wire, Direct Bury Lug, # 8 AWG, 50V max, For Underground Use, Waterproof / Corrosion Proof, Yellow, DryConn P/N 90120, Peoples Part # 42106730

iii. Bonding Pipe Clamps

(1) To be used to attach Locator wire to end of casing on replacement installations.
- Clamp, Service line, w/ Wire Attachment and Pin, For Use w/ Locator Wire, 1- 4" Pipe Diameter
  - Peoples Part # 42111955
  - MRC Global Part # 6196-6675

iv. Wax Wrap, Corrosion Resistant Coating

(1) Used to wrap Locator wire bonding clamps attached to casing to prevent corrosion.
- Primer, Trenton Wax, Brown, Surface conditioner for underground metal surfaces.
  - Peoples Part # C0180884
  - MRC Global Part # 6269-4040

- Wax Wrap, Trenton #1, Brown, For Underground Use
  - Peoples Part # C0958677
  - MRC Global Part # 6269-4029

v. Warning Tape

(1) 6 inch Plastic, Yellow, Warning, "CAUTION – GAS PIPE BELOW"
- Peoples Part # C0727800

d) Service Head Adapters

i. Used when replacing a service line to an inside meter by insertion methods.

(1) Adapter, 1-1/4" FPT (Female Pipe Thread) x 1" CTS, 0.99W COMP x 1-1/2" MPT, Service Head
- Peoples Part # C0043527
- Honeywell/Perfection Part # 71162

(2) Adapter, 1-1/2" FPT x 1" CTS, 0.99W COMP x 1-1/2" MPT, Service Head
- Peoples Part # C0043529
- Honeywell/Perfection Part # 71183

NOTE: Please consult with local office regarding use of adapters not listed.

e) Houseline

Natural gas houseline piping materials and components shall be acceptable to the authority having jurisdiction. Peoples is not a testing or approval agency. Peoples accepts houseline-piping materials listed and installed according to the National or International Fuel Gas Codes.

3. Plastic Pipe Sizing Requirements

Proper sizing of the pipe is important to ensure that each gas appliance receives enough gas to perform properly. An SLI must know the inlet pressure from the main (confirm with Peoples' Engineering Department where necessary), current and future anticipated load in cubic feet of gas per hour (cu. ft./ hr), and the length of the service in order to determine which diameter plastic pipe to install. The sizing charts in Appendix 1 can be used to determine the appropriate diameter piping for service lines a) up to 200 feet in length, however the maximum length permitted by Peoples is 100 feet, b) up to 2 inches in diameter, and c) with up to 60 pounds inlet pressure. Please refer to the International or National Fuel Gas Codes for sizing lines in excess of these limits.

a) Determining Load

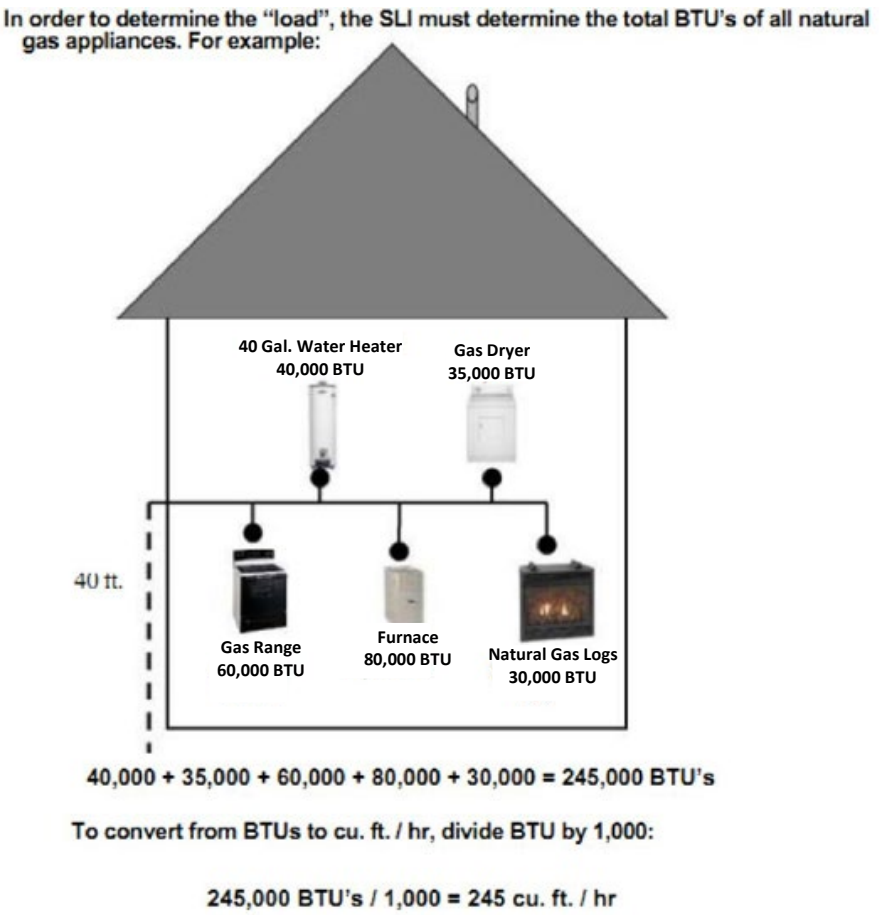

Once the load is known, determine the inlet service pressure (assume low pressure - 7 inches WC or 4 ounces – for this example) and the length of the service (assume 40 feet for this example). Refer to the Pipe Sizing Charts in Appendix 1 to determine the appropriate plastic pipe size.

b) Using the Charts

i. From our example above, we determined a 245 cu. ft. / hr load on a low pressure (4 ounce system), with a 40 foot service line length. The chart indicates that 0.121 wall 1-1/4" CTS tubing is capable of delivering 414 cu. ft. / hr with a 4 ounce inlet pressure, and is able to accommodate the 245 cu. ft. / hr load.

Inlet Pressure 0.25 psig (= 4 oz. per in^2 = 7 inches of water column)
Pressure Drop 0.5 inch water column

CTS Size (inches)	Nominal Size (inches)	Nominal OD (inches)	Inside Diameter (inches)	Length 10	20	30	40	50	60	70
.062 wall CTS Tubing PE3408										
3/8	3/8	0.375	0.251	15	10	8	7	6	5	5
.090 wall CTS Tubing PE3408										
1/2	5/8	0.625	0.445	72	48	38	32	29	26	24
.099 wall CTS Tubing PE2406										
1	1 1/8	1.125	0.927	532	357	283	240	211	190	17
.121 wall CTS Tubing PE3408										
1 1/4	1 3/8	1.375	1.133	918	617	488	414	364	328	30
SDR 11 IPS Pipe (6800 Series)										
2	2 3/8	2.375	1.943	3,994	2,681	2,123	1,800	1,583	1,425	1,3

c) Chart Calculations

i. Peoples' pipe sizing charts were prepared using the Mueller Equation and the following constants:

(1) Atmospheric Pressure 14.7
(2) Standard Condition Temperature 60^0 F
(3) Gas Specific Gravity 0.6
(4) Gas Viscosity 7.39×10^{-6} lb/ft sec.
(5) 1 cu. Ft. gas = 1,000 BTU's
(6) Pressure Drop 10%

Note: Peoples will not provide 2 psig gas service for a single-family dwelling. For any variances, contact local supervision and engineering for additional considerations.

4. Installation Requirements

a) General Requirements

i. Service Lines

(1) Individual service lines are preferred for each unit of a newly constructed multi-unit structure; however, individual service lines are required for a townhouse consisting of three or more units that can be sold or leased and function as separate entities.
(2) The requirement of individual service lines to townhouse units shall apply to renovations of existing structures which meet the conditions in 4.a.i.(1) and to which gas service has been provided for a period of less than one year.
(3) Outlet piping from the meter shall not pass through space or property that is or could be controlled or owned by a person other than the customer.
(4) Minimum burial depth of a service line shall be no less than 12 inches on private property and 18 inches on public property (street and roads). Where cover requirements cannot be met due to existing substructures, the portion of the service line that could be subjected to superimposed loads shall be cased or bridged, or the pipe shall be appropriately strengthened.
(5) Service lines shall be installed in a manner that will minimize anticipated piping strain and external loading.
(6) Service lines installed through walls shall be encased in a protective pipe and shall be sealed at the wall to prevent gas or water leakage into the building. Refer to Drawing No. 3 and Drawing 5-A in Appendix 6 Meter Installation Measurements.
(7) Service lines shall not be installed under a building.
(8) The transition from plastic pipe to more rigid piping at the building wall or meter set assembly shall be protected from shear and bending. A suitable mounting bracket must be used to attach the riser to the building or remote post. NOTE: In the case of large construction projects involving several existing services, additional time may be required to transition from the existing service to the newly installed service. This transition may include removal of the existing riser to make room for the replacement riser. In this scenario, it is acceptable to activate the new service without a riser support bracket for a period not to exceed 72 hours (3 days). This temporary period without bracket support is only permissible if the service is properly backfilled at ground level (or the meter is blocked/supported) and if the riser outlet is securely fastened at the meter stop. This note is intended to minimize damage to the customers' foundations by installing a new riser bracket in the same existing riser bracket location.
(9) Plastic pipe installed in a vault or any other below-grade enclosure must be completely encased in gas-tight metal pipe and fittings that are adequately protected from corrosion.

(10) Plastic pipe shall be installed with sufficient clearance and shall be insulated from any heat source that may impair serviceability of the pipe.
(11) No person may make a plastic pipe joint unless that person has been qualified in plastic pipe joining utilizing qualified plastic pipe joining procedures.
(12) Multi meter manifolds must be marked with a tag or other permanent means to identify the location it serves.
(13) Inspect all plastic pipe and tubing for cuts, gouges, deep scratches and other imperfections during and after installation. Inspections would include direct burial, insertion, directional boring installations, wherever the plastic pipe is exposed (i.e., exposed services and tie-in holes). Defects in plastic pipe that penetrate the pipe wall by more than 10 percent of the pipe wall thickness shall be removed.
(14) When installing a new service line or replacing an existing service line, a minimum radial separation of 12 inches must be maintained from all other utilities, conduits, ducts, and similar structures, including abandoned structures. If 12 inches separation cannot be feasibly attained at the time of installation, then mitigating measures shall be taken to protect lines against damage that might result from proximity to other structures. Examples may include the use of insulators, casing, shields or spacers. This does not apply to services crossing one another at 90 degrees.
(15) Consideration shall be given to not installing service lines in close proximity trees or shrubs.

ii. Locator Wire Warning Tape

In order to accurately locate plastic pipe and minimize future damage, plastic service line installations must include the use of electrically conductive locator wire and warning tape. The traceability of the service and/or the continuity of the Locator wire will be verified prior to accepting the installed service line into the system.

(1) Specific Installation Requirements

- Direct buried Installations
  - A continuous piece of approved Locator wire is to be installed at a distance of six inches below or beside the plastic pipe to facilitate location of the pipe after construction.
  - One end is to terminate with the plastic, coiled up at the main, while the other shall follow the riser up to the wall bracket.

- Insertion (Replacements)
  - When inserting plastic through old steel service lines, Locator wire and approved bonding clamps must be installed to the exposed ends of the old steel, which will now act as casing and allow for locating the service.
  - The Locator wire shall then follow the plastic as in direct bury installations.
  - Exposed ends of Locator wire and the approved bonding clamps are to be coated with approved wax wrap to prevent corrosion.

- The casing surface and the bonding clamp must be coated with an approved primer, then completely wrapped with wax tape.

- Plow-In
  - Plastic warning tape and Locator wire shall be installed with the plastic.
- Directional Bore
  - Before boring with plastic pipe, a thorough investigation of the area, to include pot-holing where necessary, shall be made to determine the location of all underground utilities or structures.
  - Boring installations should not be attempted in the areas of sanitary sewer laterals if the exact locations and depths of the facilities are unknown. Damage to sewer laterals by boring equipment could result in explosive amounts of natural gas in a structure. Installers are encouraged to verify sewer laterals were unharmed during installation with a post-construction inspection using a camera if the sewer lateral was not exposed during boring.
  - If plastic pipe is pulled by directional boring, a weak link shall be used that would limit the pulling forces on the plastic pipe. Note: there is no weak link for pipe 1 inch IPS and below; therefore, it is not permitted to be pulled with boring equipment.
  - Two pieces of 8 gauge locator wire shall be pulled with the plastic pipe to facilitate location of the pipe after installation. Prior to the pulling of plastic pipe, Locator wire shall be attached to the outside of the pipe in the 3 o'clock and 9 o'clock positions.
  - For more detail, contact Peoples' local office.

(2) In an effort to minimize below ground splices, wherever practical, use a continuous piece of approved Locator wire.
(3) Locator wire may not be wrapped around, or taped to, the pipe
(4) Plastic warning tape shall be installed over all direct buried service lines at approximately 6 inches below ground surface.
(5) Locator wire shall be installed as shown in the application specific diagrams found in Appendix 3.

iii. Meter Manifolds

b) Installation Techniques

i. Direct Burial

(1) The ditch bottom shall be as smooth as possible, free of rocks, debris and any sharp protrusions.

(2) Plastic pipe shall always be laid into the ditch allowing slack for thermal contractions and expansions.
(3) Changes in direction shall be made with a fitting if the change in direction exceeds the minimum bending radius of the pipe.
(4) The backfill shall be placed and compacted in layers. The fill around the pipe and first layer over the pipe shall be select backfill material.
(5) Backfilling of service lines shall only be performed or supervised by operator qualified personnel.
(6) The use of blocking to support the pipe is prohibited.
(7) There shall be a minimum of 12 inches of cover on private property and 18 inches in streets and roads
(8) The material used for backfill shall be free of materials that could damage the pipe.
(9) Plastic pipe must be installed so as to minimize shear or tensile stresses resulting from construction, backfill, thermal contraction or external loading. Plastic pipe shall be laid and continuously supported on undisturbed or well compacted earth rather than on blocking to minimize shear stresses. When rock, ledge, hard pan or boulders are encountered, the trench shall be padded with at least six inches of select backfill and filled with at least six inches over the plastic pipe.
(10) When installing new direct buried plastic gas service lines in a common trench (joint trench with other utilities), a minimum radial separation of 12 inches must be maintained from all other utilities, conduits, ducts, and similar structures, including abandoned structures. If 12 inches separation cannot be feasibly attained at the time of installation, then mitigating measures shall be taken to protect lines against damage that might result from proximity to other structures. Examples may include the use of insulators, casing, shields or spacers. This does not apply to services crossing one another at 90 degrees.

ii. Insertion

Plastic pipe may be inserted into existing service lines in lieu of replacement by trenching. The SLI must verify that the internal diameter of the existing pipe, which will become casing, will accommodate plastic pipe sized according to the Pipe Sizing Charts in Appendix 1.

(1) The old pipe shall be cleaned or reamed to the extent necessary to remove sharp edges and care shall be taken when guiding the plastic pipe into the casing to prevent damaging the plastic pipe on the casing edge.
(2) Pushing the pipe in, or a combination of pushing and pulling it in, is preferable to pulling it in to prevent excessive tensile loading.
(3) Wherever possible, the plastic shall be pushed from the meter to the street. The excavation at the street shall be at least 4 ft. by 4 ft.
(4) The leading face of the plastic pipe shall be closed during insertion.

(5) Exposed plastic pipe or tubing entering or exiting casing, must be of sufficient length and properly supported to withstand the anticipated external loading or it must be protected using a suitable bridging piece capable of withstanding the anticipated external loading.
(6) To prevent shearing type forces, protective sleeves or bridging of sufficient length shall be installed at shear points.

iii. Plow-In

(1) Plastic pipe may be installed by a pull-in or plant-in method if soil conditions, location, and survey of underground obstructions are found satisfactory.
(2) Pipe will be placed in the ground in a manner that will minimize longitudinal tensile stresses.
(3) Plastic warning tape and locator wire shall also be installed while plowing-in the plastic in accordance with the direct burial method.

iv. Directional Boring

(1) Before boring with plastic pipe, a thorough investigation of the area, to include pot-holing where necessary, shall be made to determine the location of all underground utilities or structures.
(2) If plastic pipe is pulled by directional boring, a weak link (refer to Appendix 2) shall be used that would limit the pulling forces on the plastic pipe.
(3) Boring installations should not be attempted in the areas of sanitary sewer laterals if the exact locations and depths of the facilities are unknown. Damage to sewer laterals by boring equipment could result in explosive amounts of natural gas in a structure. Installers are encouraged to verify sewer laterals were unharmed during installation with a post-construction inspection using a camera if the sewer lateral was not exposed during boring.
(4) Locator (Locator) wire shall be installed to facilitate location of the pipe.

c) Application Specific Installation Requirements

i. Low Pressure Systems
All low pressure customers will have a “curb valve” on the customer’s side of the street.

(1) Specific Requirements
Refer to the drawings in Appendix 3 for specific installation requirements for each scenario below:
- New Service – Direct Bury
- Replaced Service – Sleeved - Inside Meter
- Replaced Service – Sleeved – Outside Meter

ii. Regulated Pressure
Existing medium and intermediate pressure systems may not have a curb valve installed on the service line; therefore, it is necessary to contact the local Peoples office for the location of a pre-installed service tap prior to installation of new service line piping.

(1) Specific Requirements
Refer to the drawings in Appendix 3 for specific installation requirements for each scenario below:
- New Service - Medium Pressure - Direct Bury
- Replaced Service – Medium Pressure – Sleeved

d) Meters and Regulators

i. General Requirements

(1) New meter installations must be located outside.
(2) When selecting a meter location, consideration shall be given to potential damage by outside forces such as vehicles, construction equipment, tools or materials which could be placed on the meter and falling objects. When such potential is evident, the meter shall be protected or an alternative location selected.
(3) Meters and service regulators shall be accessible for reading, inspection, repairs, testing, changing and operation of the gas shutoff valve.
(4) When more than one meter is set at a structure, the meters shall be set at one location when practical.
(5) When more than one meter is set at a structure, each meter must be marked by a metal tag (or other permanent means) attached by the SLI, designating the part of the building being supplied by that meter.
(6) When practical, no building shall have more than one service line or more than one meter location.
(7) If a meter cannot be installed outside because an acceptable outside location is not available or protection from ambient temperatures is necessary to avoid meter freeze-ups, approval by an Operations Manager is required.
(8) Installers must consult with a Peoples representative for a meter location when unusual circumstances exist.

ii. Outside Meter and Regulator Locations

(1) Meters shall not be installed in the following locations:
- Beneath or in front of windows or other building openings that may directly obstruct emergency fire exits.
- Under interior stairways.
- Under exterior stairways
- In a crawl space.

- Within 3 feet of building openings.
- Within 3 feet of building air intakes.
- Maintain a minimum clearance of 3 feet from all ignition sources, including clothes dryer exhausts, furnace intakes, furnace exhausts, electric meter disconnects, and similar equipment. (Electric utility meters are not considered ignition sources; however, electric meter disconnects are considered ignition sources and shall be included in the 3-foot clearance requirement)

(2) Meters and service regulators shall not be installed in contact with the soil or other potentially corrosive materials. The potential for shorting out the insulated fitting shall also be considered.
(3) The meter, regulator and exposed connected piping must be protected from atmospheric corrosion by coating with approved materials.
(4) Outside meters shall be installed aboveground in a protected location adjacent to the building served.
(5) Service regulators shall be installed where gas released through the regulator relief can escape freely into the atmosphere and away from openings into buildings.
(6) Note: The service regulator vent opening has a threaded fitting that allows the vent to be piped away from opening into buildings and potential sources of ignition. One inch metallic pipe is the smallest vent size. Vents of one inch are allowed to be run ten feet. Runs over ten feet must increase on pipe diameter per every ten feet.

iii. Inside Meter and Regulator Locations

(1) Approval must be granted by Peoples before a meter on an existing medium pressure system can be installed inside a structure.
(2) Each meter installed within a building shall be located in a ventilated place and shall not be less than 3 feet from any source of ignition or any source of heat which might damage the meter.
(3) Where practical, meters shall not be located in confined spaces such as engine rooms, boiler rooms, furnace rooms or electrical equipment rooms, nor living quarters, closets, restrooms, bathrooms or similar locations. In general, the meter must be accessible.
(4) Meters shall not be installed in a crawl space.
(5) A readily accessible shutoff valve shall be located outside the building. Contact a local supervisor with questions regarding this issue.

e) House Lines

i. The installation of a customer valve is recommended for safety considerations. This valve should be installed between the outlet of the meter and the building wall (as shown on the Appendix 3 Installation drawings).

5. Pressure Testing Procedures

a) Service Line Pressure Testing Procedures

i. Low Pressure: (Less than 1 PSIG)

(1) Install the gauge assembly on service line.
(2) Install the appropriate blank or dead-end stab fitting at the end of the service line (at the curb)
(3) Pressurize the service line to 90 pounds
(4) If the line is smaller than 2 inches the test must hold for a minimum of 10 minutes
(5) If the line is 2 inches or larger, the test must hold for a minimum of 1 hour.

ii. Medium Pressure: (1 to 60 PSIG)

(1) Install the gauge assembly on service line.
(2) Install the appropriate blank or dead-end stab fitting at the end of the service line (at the curb)
(3) Pressurize the service line to 90 pounds
(4) If the line is smaller than 2 inches the test must hold for a minimum of 10 minutes
(5) If the line is 2 inches or larger, the test must hold for a minimum of 1 hour

iii. Intermediate Pressure: (Greater than 60 to 100 PSIG)

(1) Contact a Peoples representative when these pressure conditions exist.
(2) Meter will be installed at mainline to allow adequate space for required regulation devices; therefore, a service line most likely will not exist.
(3) Location of meter will be determined by a Peoples employee under these conditions. Testing requirements will also be determined by the Peoples representative.

iv. Recommended Materials:

(1) A calibrated spring gauge with a mid-range of approximately 90 pounds.
(2) A calibrated spring gauge with a mid-range of approximately 150 pounds (if required).
(3) Kuhlman gauge
(4) A tee assembly to accept a 1/8” male thread, a 1/4” gauge, and a Schrader valve (tire valve) for the introduction of air into the system.
(5) 3/4” threaded steel plug (if required)
(6) 1” threaded steel plug (if required)
(7) 3/4” X 1/8” reducing plug (if required)

(8) 1” X 1/8” reducing plug (if required)
(9) A blank or dead-end stab to fit the appropriate service line size.
(10) An air compressor, pump, or compressed gas cylinder capable of pressurizing the service line to a minimum of 188 pounds pressure.

Gauges used for service line pressure testing shall meet the requirements of ASME B40.1, Grade B, 3-2-3% accuracy. While other gauges may be used, the gauge below meets these requirements and is available from MRC Global.

McDaniel Spring Gauge

- J8E, Utility Style 2 1/2"
- Dial Size 1/4" NPT Bottom
- Connected
- Black Enameled Steel Case
- Brass Internals



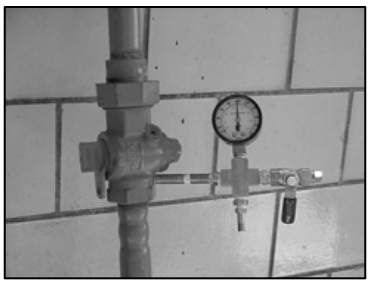

6. Requesting Connection (Tie-In) to the Peoples Distribution System

a) Serve Installation Record (SIR Form)

Once the installation is complete and has been successfully pressure tested, a completed Service Installation Record Form must be submitted electronically at https://www.peoples-gas.com/plumbers/.

i. Upon receipt of the completed form, a Peoples representative will verify that the Operator Qualification credentials of the SLI are valid and will verify that the employer has a DOT-PHMSA compliant Drug and Alcohol testing program that has been verified and approved by *Veriforce* (Peoples representative).

7. Inspection and Tie-In

a) Completed SIR Form

Upon receipt of a completed SIR form (for new construction services installed by the builder/developer) and successful verification of the installer's credentials, Peoples will dispatch representatives to process the tie-in request.

i. Repaired and replaced service lines (existing customers) will be scheduled for tie-in as soon as possible, generally the same day (depending on when the request is received), but no later than 24 hours after requested.

ii. New construction service line tie-in requests will be scheduled to be completed within 10 business days.

b) Arrival of Peoples Representative

Upon arrival, a Peoples representative will inspect the installation against the requirements outlined in this manual, including, but not limited to:

i. Verification that Peoples approved materials were used;
ii. Verification of valid pressure test;
iii. Verification that the service line can be located accurately and/or that the Locator wire is continuous;
iv. Verification that the meter manifold is supported properly;
v. Verification that exposed houseline is adequately coated to prevent atmospheric corrosion.

c) New Construction

For new construction, the installer or customer must schedule an appointment for the connection of the service line and the installation of the meter. Access to the inside of the building must be provided during this appointment to activate the gas service.

i. Prior to service activation, Peoples' personnel will verify that there is no leakage.

(1) If no leak is found, Peoples personnel will complete the turn-on.
(2) If a leak is discovered and can be isolated, Peoples will set the meter, and turn on the service, utilizing a houseline valve upstream of the leak to isolate the leaking section of houseline. Peoples will "Red Tag" the leaking portion of the houseline.
(3) If the houseline leaks, but the leak cannot be isolated, Peoples will set the meter, but will lock the meter stop and leave a red tag. A "Live Gas to this Point" tag will

also be attached to the locked meter. The customer will be responsible to have the repairs made by a qualified plumber. After the repairs are made, the customer will call Peoples to schedule a turn-on. Another SIR form is not required in this situation as the service line has already been properly tested and activated.

ii. If no access is provided, Peoples will cancel the appointment and the customer will be responsible to call Peoples Natural Gas to reschedule the turn-on.

d) Non-Emergency

If a customer or their representative schedules a non-emergency field visit and fails to prepare of Peoples arrival, a fee of $30 may be charged. This fee will be charged if it is necessary for Peoples to make a second visit or incur unusual expense as the result. Reasons to charge this fee include, but are not limited to: leaks, material defects, non-approved materials or other unsatisfactory conditions which result in Peoples' inability to connect the lines due to installers' errors.

8. Re-establishing Gas Service after a Buried House Line Leak

The following procedure applies to re-establishing gas service after house line repairs or replacement in all Peoples service territories.

i. If the customer's meter has been locked at the meter valve after discovery of a leak that poses an immediate danger (Grade 1 Leak), the plumber/customer's representative may begin house line repairs without prior notice to Peoples.
ii. If the customer's meter has been left on after discovery of a leak that does not pose an immediate danger (Grade 2 Leak), the plumber/customer's representative shall request a meter turn-off prior to the start of house line repairs. Only a Peoples employee shall close the meter valve for house line repairs.
iii. Pressure testing for new, renewed, previously abandoned and partially replaced buried house lines from the Company's meter set through the Customer's building shall be performed by a qualified person according to the International and/or National Fuel Gas Codes.
iv. The house line pressure test mentioned in Step 3 does not require witnessing or inspection by Peoples personnel.
v. After a successful houseline pressure test has been performed, the plumber/customer representative will notify Peoples that the premise is ready to have gas service reinstated.

Appendix 1

Pipe Sizing Charts

Refer to International Fuel Gas Code for sizing in excess of the chart limits

Variables	Units
Atmospheric Pressure	14.7 psia
Gas Specific Gravity	0.6
Gas Viscosity	7.39E-06 lb/ft sec

Inlet Pressure **0.25** psig (7 inches of water column)
Pressure Drop **0.5** inch water column

STEEEL PIPE - Cubic Feet of Gas per Hour, Maximum Capacities

Nominal Diameter (inches)	Inside Diameter (inches)	Length of Pipe, (feet) 10	20	30	40	50	60	70	80	90	100	125	150	175	200	300	400	500	600	700	800	900	1,000
1/2	0.622	179	120	95	81	71	64	59	54	51	48	42	38	35	32	25	21	19	17	16	14	13	13
3/4	0.824	386	259	205	174	153	138	126	117	109	103	90	81	74	69	55	46	41	37	34	31	29	27
1	1.049	745	500	396	336	295	266	243	225	210	198	174	157	144	133	105	89	79	71	65	60	56	53
1 1/4	1.380	1,572	1,055	836	708	623	561	513	476	444	418	368	331	303	281	222	188	166	149	137	127	118	111
1 1/2	1.610	2,393	1,606	1,272	1,078	948	854	782	724	676	637	560	504	461	427	338	287	252	227	208	193	180	169
2	2.067	4,727	3,173	2,513	2,130	1,874	1,687	1,544	1,430	1,336	1,258	1,106	996	912	844	669	567	499	449	411	380	356	335

Variables	Units
Atmospheric Pressure	14.7 psia
Gas Specific Gravity	0.6
Gas Viscosity	7.39E-06 lb/ft sec

Inlet Pressure **0.25** psig (7 inches of water column)
Pressure Drop **0.5** inch water column

PLASTIC PIPE - Cubic Feet of Gas per Hour, Maximum Capacities

CTS Size (inches)	Nominal Size (inches)	Nominal OD (inches)	Inside Diameter (inches)	Length of Tubing, (feet) 10	20	30	40	50	60	70	80	90	100	125	150	175	200	300	400	500	600	700	800	900	1,000
.062 wall CTS Tubing																									
3/8	3/8	0.375	0.251	15	10	8	7	6	5	5	5	4	4	4	3	3	3	2	2	2	1	1	1	1	1
.090 wall CTS Tubing																									
1/2	5/8	0.625	0.445	72	48	38	32	29	26	24	22	20	19	17	15	14	13	10	9	8	7	6	6	5	5
.099 wall CTS Tubing																									
1	1 1/8	1.125	0.927	532	357	283	240	211	190	174	161	150	141	124	112	103	95	75	64	56	50	46	43	40	38
.121 wall CTS Tubing																									
1 1/4	1 3/8	1.375	1.133	918	617	488	414	364	328	300	278	260	244	215	194	177	164	130	110	97	87	80	74	69	65
SDR 11 IPS Pipe (6800 Series)																									
2	2 3/8	2.375	1.943	3,994	2,681	2,123	1,800	1,583	1,425	1,304	1,208	1,129	1,063	935	842	770	713	565	479	421	379	347	321	300	283
3	3 1/2	3.500	2.864	11,495	7,717	6,112	5,180	4,556	4,103	3,755	3,477	3,250	3,059	2,690	2,423	2,217	2,053	1,626	1,378	1,212	1,092	999	925	865	814
4	4 1/2	4.500	3.682	22,795	15,302	12,120	10,272	9,035	8,136	7,446	6,896	6,444	6,065	5,335	4,804	4,396	4,072	3,225	2,733	2,404	2,165	1,981	1,835	1,715	1,614
6	6 5/8	6.625	5.421	65,409	43,908	34,777	29,475	25,926	23,345	21,365	19,786	18,490	17,404	15,308	13,784	12,615	11,683	9,253	7,842	6,898	6,212	5,685	5,265	4,920	4,631
8	8 5/8	8.625	7.057	134,203	90,088	71,354	60,475	53,193	47,899	43,836	40,596	37,938	35,708	31,408	28,282	25,883	23,970	18,985	16,091	14,153	12,745	11,664	10,801	10,094	9,501

Variables	Units
Atmospheric Pressure	14.7 psia
Gas Specific Gravity	0.6
Gas Viscosity	7.39E-06 lb/ft sec

Inlet Pressure 2 psig

Pressure Drop 0.2 psi

STEEL PIPE - Cubic Feet of Gas per Hour, Maximum Capacities

Nominal Diameter (inches)	Inside Diameter (inches)	Length of Pipe, (feet) 10	20	30	40	50	60	70	80	90	100	125	150	175	200	300	400	500	750	1,000	1,500	2,000	2,500	3,000
1/2	0.622	759	510	404	342	301	271	248	230	215	202	178	160	146	136	107	91	80	63	54	43	36	32	29
3/4	0.824	1,633	1,096	868	736	647	583	534	494	462	435	382	344	315	292	231	196	172	136	116	92	78	68	61
1	1.049	3,154	2,117	1,677	1,421	1,250	1,126	1,030	954	891	839	738	665	608	563	446	378	333	263	223	177	150	132	119
1 1/4	1.380	6,658	4,470	3,540	3,000	2,639	2,376	2,175	2,014	1,882	1,772	1,558	1,403	1,284	1,189	942	798	702	556	471	373	316	278	251
1 1/2	1.610	10,134	6,803	5,388	4,567	4,017	3,617	3,310	3,066	2,865	2,696	2,372	2,136	1,955	1,810	1,434	1,215	1,069	846	717	568	482	424	381
2	2.067	20,021	13,440	10,645	9,022	7,936	7,146	6,540	6,056	5,660	5,327	4,686	4,219	3,861	3,576	2,832	2,400	2,111	1,672	1,417	1,123	951	837	754

PLASTIC PIPE - Cubic Feet of Gas per Hour, Maximum Capacities

CTS Size (inches)	Nominal Size (inches)	Nominal OD (inches)	Inside Diameter (inches)	Length of Pipe, (feet) 10	20	30	40	50	60	70	80	90	100	125	150	175	200	300	400	500	750	1,000	1,500	2,000
.062 wall CTS Tubing PE 3408																								
3/8	3/8	0.375	0.251	64	43	34	29	25	23	21	19	18	17	15	13	12	11	9	8	7	5	5	4	3
.090 wall CTS Tubing PE 3408																								
1/2	5/8	0.625	0.445	305	205	162	137	121	109	100	92	86	81	71	64	59	54	43	37	32	25	22	17	14
.099 wall CTS Tubing PE 2406																								
1	1 1/8	1.125	0.927	2,252	1,511	1,197	1,015	892	804	735	681	636	599	527	474	434	402	319	270	237	188	159	126	107
.121 wall CTS Tubing PE 3408																								
1 1/4	1 3/8	1.375	1.133	3,890	2,611	2,068	1,753	1,542	1,388	1,271	1,177	1,100	1,035	910	820	750	695	550	466	410	325	275	218	185
SDR 11 IPS Pipe PE 3408 / 2406																								
2	2 3/8	2.375	1.943	16,915	11,355	8,993	7,622	6,704	6,037	5,525	5,117	4,782	4,501	3,959	3,565	3,262	3,021	2,393	2,028	1,784	1,413	1,197	948	804
SDR 11 IPS Pipe PE 3408																								
3	3 1/2	3.500	2.864	48,689	32,685	25,887	21,941	19,299	17,378	15,904	14,728	13,764	12,955	11,395	10,261	9,390	8,696	6,888	5,838	5,135	4,067	3,447	2,730	2,314
4	4 1/2	4.500	3.682	96,552	64,814	51,335	43,509	38,270	34,461	31,538	29,207	27,294	25,690	22,596	20,347	18,621	17,245	13,659	11,576	10,182	8,065	6,835	5,414	4,588
6	6 5/8	6.625	5.421	277,044	185,976	147,301	124,843	109,810	98,881	90,494	83,806	78,318	73,714	64,837	58,384	53,432	49,483	39,193	33,217	29,217	23,141	19,613	15,534	13,166
8	8 5/8	8.625	7.057	568,424	381,576	302,223	256,146	225,302	202,878	185,670	171,948	160,688	151,242	133,030	119,790	109,629	101,527	80,413	68,154	59,947	47,480	40,241	31,873	27,013
SDR 11.5 IPS Pipe PE 2406																								
3	3 1/2	3.500	2.886	49,715	33,373	26,433	22,403	19,705	17,744	16,239	15,039	14,054	13,228	11,635	10,477	9,588	8,880	7,033	5,961	5,243	4,153	3,520	2,788	2,363
SDR 13.5 IPS Pipe PE 2406																								
4	4 1/2	4.500	3.834	107,804	72,367	57,318	48,579	42,729	38,477	35,213	32,611	30,475	28,684	25,230	22,719	20,792	19,255	15,251	12,926	11,369	9,005	7,632	6,045	5,123
6	6 5/8	6.625	5.643	309,064	207,470	164,325	139,272	122,501	110,309	100,952	93,491	87,369	82,233	72,331	65,132	59,608	55,202	43,722	37,056	32,594	25,816	21,880	17,330	14,688
8	8 5/8	8.625	7.347	634,356	425,834	337,278	285,857	251,435	226,410	207,206	191,892	179,326	168,785	148,460	133,684	122,345	113,303	89,740	76,059	66,900	52,987	44,909	35,570	30,147

Variables	Units
Atmospheric Pressure	14.7 psia
Gas Specific Gravity	0.6
Gas Viscosity	7.39E-06 lb/ft sec

Inlet Pressure 5 psig

Pressure Drop 0.5 psi

STEEL PIPE - Cubic Feet of Gas per Hour, Maximum Capacities

Nominal Diameter (inches)	Inside Diameter (inches)	Length of Pipe, (feet) 10	20	30	40	50	60	70	80	90	100	125	150	175	200	300	400	500	750	1,000	1,500	2,000	2,500	3,000
1/2	0.622	1,408	945	749	635	558	503	460	426	398	375	330	297	272	252	199	169	149	118	100	79	67	59	53
3/4	0.824	3,030	2,034	1,611	1,365	1,201	1,082	990	917	857	806	709	639	584	541	429	363	320	253	215	170	144	127	114
1	1.049	5,850	3,927	3,111	2,636	2,319	2,088	1,911	1,770	1,654	1,557	1,369	1,233	1,128	1,045	828	701	617	489	414	328	278	245	220
1 1/4	1.380	12,352	8,292	6,567	5,566	4,896	4,409	4,035	3,736	3,492	3,287	2,891	2,603	2,382	2,206	1,747	1,481	1,303	1,032	874	693	587	516	465
1 1/2	1.610	18,800	12,620	9,996	8,472	7,452	6,710	6,141	5,687	5,315	5,002	4,400	3,962	3,626	3,358	2,660	2,254	1,983	1,570	1,331	1,054	893	786	708
2	2.067	37,142	24,933	19,748	16,737	14,722	13,257	12,132	11,235	10,500	9,883	8,692	7,827	7,163	6,634	5,254	4,453	3,917	3,102	2,629	2,083	1,765	1,553	1,398

PLASTIC PIPE - Cubic Feet of Gas per Hour, Maximum Capacities

CTS Size (inches)	Nominal Size (inches)	Nominal OD (inches)	Inside Diameter (inches)	Length of Pipe, (feet) 10	20	30	40	50	60	70	80	90	100	125	150	175	200	300	400	500	750	1,000	1,500	2,000
.062 wall CTS Tubing PE 3408																								
3/8	3/8	0.375	0.251	119	80	63	54	47	42	39	36	34	32	28	25	23	21	17	14	13	10	8	7	6
.090 wall CTS Tubing PE 3408																								
1/2	5/8	0.625	0.445	565	380	301	255	224	202	185	171	160	150	132	119	109	101	80	68	60	47	40	32	27
.099 wall CTS Tubing PE 2406																								
1	1 1/8	1.125	0.927	4,177	2,804	2,221	1,882	1,656	1,491	1,364	1,264	1,181	1,111	978	880	806	746	591	501	441	349	296	234	199
.121 wall CTS Tubing PE 3408																								
1 1/4	1 3/8	1.375	1.133	7,217	4,845	3,837	3,252	2,860	2,576	2,357	2,183	2,040	1,920	1,689	1,521	1,392	1,289	1,021	865	761	603	511	405	343
SDR 11 IPS Pipe PE 3408 / 2406																								
2	2 3/8	2.375	1.943	31,380	21,065	16,684	14,141	12,438	11,200	10,250	9,492	8,871	8,349	7,344	6,613	6,052	5,605	4,439	3,762	3,309	2,621	2,222	1,760	1,491
SDR 11 IPS Pipe PE 3408																								
3	3 1/2	3.500	2.864	90,327	60,635	48,025	40,704	35,802	32,239	29,504	27,324	25,534	24,033	21,139	19,035	17,421	16,133	12,778	10,830	9,526	7,545	6,395	5,065	4,293
4	4 1/2	4.500	3.682	179,120	120,241	95,235	80,716	70,996	63,930	58,508	54,183	50,635	47,659	41,920	37,748	34,546	31,993	25,340	21,476	18,890	14,962	12,681	10,044	8,512
6	6 5/8	6.625	5.421	513,962	345,016	273,267	231,604	203,715	183,440	167,880	155,473	145,292	136,751	120,284	108,313	99,125	91,799	72,709	61,624	54,203	42,931	36,386	28,819	24,425
8	8 5/8	8.625	7.057	1,054,520	707,885	560,674	475,193	417,972	376,373	344,448	318,991	298,102	280,579	246,792	222,230	203,380	188,349	149,180	126,436	111,211	88,084	74,654	59,129	50,114
SDR 11.5 IPS Pipe PE 2406																								
3	3 1/2	3.500	2.886	92,230	61,913	49,037	41,561	36,557	32,918	30,126	27,899	26,073	24,540	21,585	19,437	17,788	16,473	13,048	11,058	9,727	7,704	6,529	5,172	4,383
SDR 13.5 IPS Pipe PE 2406																								
4	4 1/2	4.500	3.834	199,994	134,253	106,334	90,122	79,270	71,381	65,326	60,498	56,536	53,213	46,805	42,147	38,572	35,721	28,293	23,979	21,092	16,705	14,158	11,214	9,504
6	6 5/8	6.625	5.643	573,363	384,891	304,849	258,372	227,260	204,641	187,283	173,442	162,084	152,556	134,186	120,831	110,582	102,409	81,112	68,746	60,468	47,893	40,591	32,150	27,248
8	8 5/8	8.625	7.347	1,176,833	789,992	625,706	530,311	466,452	420,028	384,400	355,990	332,679	313,123	275,418	248,006	226,970	210,195	166,483	141,101	124,110	98,300	83,313	65,988	55,927

Variables	Units
Atmospheric Pressure	14.7 psia
Gas Specific Gravity	0.6
Gas Viscosity	7.39E-06 lb/ft sec

Inlet Pressure 10 psig

Pressure Drop 1 psi

STEEL PIPE - Cubic Feet of Gas per Hour, Maximum Capacities

Nominal Diameter (inches)	Inside Diameter (inches)	Length of Pipe, (feet) 10	20	30	40	50	60	70	80	90	100	125	150	175	200	300	400	500	750	1,000	1,500	2,000	2,500	3,000
1/2	0.622	2,378	1,597	1,265	1,072	943	849	777	719	672	633	557	501	459	425	336	285	251	199	168	133	113	99	90
3/4	0.824	5,118	3,436	2,721	2,306	2,029	1,827	1,672	1,548	1,447	1,362	1,198	1,079	987	914	724	614	540	428	362	287	243	214	193
1	1.049	9,882	6,634	5,254	4,453	3,917	3,527	3,228	2,989	2,793	2,629	2,313	2,082	1,906	1,765	1,398	1,185	1,042	825	700	554	470	413	372
1 1/4	1.380	20,864	14,006	11,093	9,402	8,270	7,447	6,815	6,311	5,898	5,551	4,883	4,397	4,024	3,726	2,952	2,502	2,200	1,743	1,477	1,170	992	872	785
1 1/2	1.610	31,756	21,317	16,884	14,310	12,587	11,334	10,373	9,606	8,977	8,449	7,432	6,692	6,125	5,672	4,492	3,807	3,349	2,653	2,248	1,781	1,509	1,327	1,195
2	2.067	62,737	42,115	33,356	28,271	24,867	22,392	20,492	18,978	17,735	16,693	14,683	13,221	12,100	11,206	8,875	7,522	6,616	5,240	4,441	3,518	2,981	2,622	2,361

PLASTIC PIPE - Cubic Feet of Gas per Hour, Maximum Capacities

CTS Size (inches)	Nominal Size (inches)	Nominal OD (inches)	Inside Diameter (inches)	Length of Pipe, (feet) 10	20	30	40	50	60	70	80	90	100	125	150	175	200	300	400	500	750	1,000	1,500	2,000
.062 wall CTS Tubing PE 3408																								
3/8	3/8	0.375	0.251	201	135	107	90	80	72	66	61	57	53	47	42	39	36	28	24	21	17	14	11	10
.090 wall CTS Tubing PE 3408																								
1/2	5/8	0.625	0.445	955	641	508	430	379	341	312	289	270	254	224	201	184	171	135	115	101	80	68	54	45
.099 wall CTS Tubing PE 2406																								
1	1 1/8	1.125	0.927	7,055	4,736	3,751	3,179	2,796	2,518	2,305	2,134	1,994	1,877	1,651	1,487	1,361	1,260	998	846	744	589	499	396	335
.121 wall CTS Tubing PE 3408																								
1 1/4	1 3/8	1.375	1.133	12,190	8,183	6,481	5,493	4,832	4,351	3,982	3,687	3,446	3,243	2,853	2,569	2,351	2,177	1,724	1,462	1,286	1,018	863	684	579
SDR 11 IPS Pipe PE 3408 / 2406																								
2	2 3/8	2.375	1.943	53,004	35,581	28,182	23,885	21,009	18,918	17,313	16,034	14,984	14,103	12,405	11,170	10,223	9,467	7,498	6,355	5,590	4,427	3,752	2,972	2,519
SDR 11 IPS Pipe PE 3408																								
3	3 1/2	3.500	2.864	152,572	102,419	81,120	68,753	60,474	54,455	49,836	46,153	43,130	40,595	35,707	32,153	29,426	27,251	21,584	18,293	16,090	12,744	10,801	8,555	7,251
4	4 1/2	4.500	3.682	302,552	203,099	160,863	136,338	119,920	107,985	98,826	91,522	85,529	80,501	70,807	63,760	58,352	54,039	42,801	36,276	31,908	25,272	21,419	16,965	14,378
6	6 5/8	6.625	5.421	868,138	582,769	461,577	391,205	344,097	309,850	283,568	262,610	245,414	230,988	203,173	182,952	167,433	155,059	122,813	104,089	91,555	72,515	61,459	48,678	41,257
8	8 5/8	8.625	7.057	1,781,198	1,195,694	947,038	802,653	706,000	635,734	581,809	538,810	503,527	473,928	416,859	375,370	343,530	318,141	251,981	213,564	187,847	148,783	126,099	99,876	84,649
SDR 11.5 IPS Pipe PE 2406																								
3	3 1/2	3.500	2.886	155,787	104,577	82,830	70,201	61,748	55,602	50,886	47,125	44,039	41,451	36,459	32,830	30,046	27,825	22,039	18,679	16,429	13,013	11,029	8,735	7,404
SDR 13.5 IPS Pipe PE 2406																								
4	4 1/2	4.500	3.834	337,811	226,768	179,610	152,226	133,896	120,569	110,343	102,187	95,496	89,882	79,059	71,190	65,152	60,337	47,789	40,503	35,626	28,217	23,915	18,942	16,054
6	6 5/8	6.625	5.643	968,472	650,122	514,923	436,418	383,866	345,661	316,341	292,961	273,778	257,684	226,654	204,096	186,784	172,980	137,007	116,119	102,136	80,896	68,563	54,304	46,025
8	8 5/8	8.625	7.347	1,987,798	1,334,381	1,056,884	895,752	787,888	709,472	649,293	601,306	561,931	528,898	465,210	418,909	383,376	355,042	281,208	238,335	209,635	166,040	140,725	111,460	94,467

Variables	Units
Atmospheric Pressure	14.7 psia
Gas Specific Gravity	0.6
Gas Viscosity	7.39E-06 lb/ft sec

Inlet Pressure 20 psig

Pressure Drop 2 psi

STEEL PIPE - Cubic Feet of Gas per Hour, Maximum Capacities

Nominal Diameter (inches)	Inside Diameter (inches)	Length of Pipe, (feet) 10	20	30	40	50	60	70	80	90	100	125	150	175	200	300	400	500	750	1,000	1,500	2,000	2,500	3,000
1/2	0.622	4,286	2,877	2,279	1,932	1,699	1,530	1,400	1,297	1,212	1,140	1,003	903	827	766	606	514	452	358	303	240	204	179	161
3/4	0.824	9,224	6,192	4,904	4,156	3,656	3,292	3,013	2,790	2,607	2,454	2,159	1,944	1,779	1,647	1,305	1,106	973	770	653	517	438	386	347
1	1.049	17,808	11,954	9,468	8,025	7,059	6,356	5,817	5,387	5,034	4,738	4,168	3,753	3,435	3,181	2,519	2,135	1,878	1,488	1,261	999	846	744	670
1 1/4	1.380	37,599	25,240	19,991	16,943	14,903	13,420	12,281	11,374	10,629	10,004	8,799	7,924	7,252	6,716	5,319	4,508	3,965	3,141	2,662	2,108	1,787	1,572	1,415
1 1/2	1.610	57,228	38,416	30,427	25,788	22,683	20,425	18,693	17,311	16,178	15,227	13,393	12,060	11,037	10,222	8,096	6,862	6,035	4,780	4,051	3,209	2,720	2,392	2,154
2	2.067	113,060	75,896	60,113	50,948	44,813	40,353	36,930	34,201	31,961	30,082	26,460	23,826	21,805	20,194	15,994	13,556	11,923	9,444	8,004	6,340	5,373	4,726	4,256

PLASTIC PIPE - Cubic Feet of Gas per Hour, Maximum Capacities

CTS Size (inches)	Nominal Size (inches)	Nominal OD (inches)	Inside Diameter (inches)	Length of Pipe, (feet) 10	20	30	40	50	60	70	80	90	100	125	150	175	200	300	400	500	750	1,000	1,500	2,000
.062 wall CTS Tubing PE 3408																								
3/8	3/8	0.375	0.251	362	243	192	163	143	129	118	109	102	96	85	76	70	65	51	43	38	30	26	20	17
.090 wall CTS Tubing PE 3408																								
1/2	5/8	0.625	0.445	1,721	1,155	915	776	682	614	562	521	487	458	403	363	332	307	243	206	182	144	122	97	82
.099 wall CTS Tubing PE 2406																								
1	1 1/8	1.125	0.927	12,715	8,535	6,760	5,729	5,040	4,538	4,153	3,846	3,594	3,383	2,976	2,679	2,452	2,271	1,799	1,524	1,341	1,062	900	713	604
.121 wall CTS Tubing PE 3408																								
1 1/4	1 3/8	1.375	1.133	21,968	14,747	11,680	9,899	8,707	7,841	7,176	6,645	6,210	5,845	5,141	4,629	4,237	3,924	3,108	2,634	2,317	1,835	1,555	1,232	1,044
SDR 11 IPS Pipe PE 3408 / 2406																								
2	2 3/8	2.375	1.943	95,520	64,122	50,787	43,044	37,861	34,093	31,201	28,895	27,003	25,415	22,355	20,130	18,423	17,061	13,513	11,453	10,074	7,979	6,762	5,356	4,539
SDR 11 IPS Pipe PE 3408																								
3	3 1/2	3.500	2.864	274,954	184,573	146,189	123,901	108,981	98,135	89,811	83,173	77,727	73,158	64,348	57,944	53,029	49,110	38,897	32,967	28,997	22,967	19,465	15,417	13,067
4	4 1/2	4.500	3.682	545,238	366,011	289,896	245,698	216,112	194,603	178,096	164,934	154,133	145,073	127,604	114,904	105,157	97,385	77,133	65,374	57,501	45,543	38,600	30,573	25,912
6	6 5/8	6.625	5.421	1,564,496	1,050,224	831,820	705,001	620,107	558,390	511,026	473,258	442,267	416,269	366,143	329,702	301,736	279,436	221,325	187,581	164,993	130,682	110,758	87,725	74,350
8	8 5/8	8.625	7.057	3,209,946	2,154,793	1,706,684	1,446,483	1,272,301	1,145,673	1,048,495	971,004	907,420	854,078	751,233	676,465	619,086	573,331	454,102	384,869	338,524	268,125	227,247	179,989	152,548
SDR 11.5 IPS Pipe PE 2406																								
3	3 1/2	3.500	2.886	280,747	188,462	149,269	126,512	111,278	100,202	91,703	84,926	79,364	74,699	65,704	59,165	54,146	50,144	39,716	33,661	29,608	23,451	19,875	15,742	13,342
SDR 13.5 IPS Pipe PE 2406																								
4	4 1/2	4.500	3.834	608,779	408,665	323,680	274,331	241,297	217,282	198,851	184,155	172,096	161,979	142,474	128,294	117,412	108,735	86,122	72,992	64,203	50,851	43,098	34,136	28,931
6	6 5/8	6.625	5.643	1,745,311	1,171,603	927,958	786,481	691,775	622,925	570,087	527,954	493,382	464,379	408,460	367,807	336,609	311,731	246,904	209,261	184,062	145,785	123,559	97,863	82,943
8	8 5/8	8.625	7.347	3,582,266	2,404,726	1,904,641	1,614,259	1,419,875	1,278,559	1,170,109	1,083,630	1,012,671	953,142	838,368	754,928	690,893	639,831	506,773	429,510	377,790	299,225	253,605	200,865	170,242

Variables	Units
Atmospheric Pressure	14.7 psia
Gas Specific Gravity	0.6
Gas Viscosity	7.39E-06 lb/ft sec

Inlet Pressure 30 psig

Pressure Drop 3 psi

STEEL PIPE - Cubic Feet of Gas per Hour, Maximum Capacities

Nominal Diameter (inches)	Inside Diameter (inches)	Length of Pipe, (feet) 10	20	30	40	50	60	70	80	90	100	125	150	175	200	300	400	500	750	1,000	1,500	2,000	2,500	3,000
1/2	0.622	6,242	4,190	3,319	2,813	2,474	2,228	2,039	1,888	1,765	1,661	1,461	1,316	1,204	1,115	883	748	658	521	442	350	297	261	235
3/4	0.824	13,433	9,017	7,142	6,053	5,324	4,794	4,388	4,064	3,797	3,574	3,144	2,831	2,591	2,399	1,900	1,611	1,417	1,122	951	753	638	562	506
1	1.049	25,935	17,410	13,789	11,687	10,280	9,257	8,471	7,845	7,332	6,901	6,070	5,466	5,002	4,632	3,669	3,110	2,735	2,166	1,836	1,454	1,233	1,084	976
1 1/4	1.380	54,758	36,758	29,114	24,675	21,704	19,544	17,886	16,564	15,480	14,570	12,815	11,540	10,561	9,780	7,746	6,565	5,775	4,574	3,877	3,070	2,602	2,289	2,061
1 1/2	1.610	83,344	55,948	44,313	37,557	33,035	29,747	27,224	25,212	23,561	22,176	19,505	17,564	16,074	14,886	11,790	9,993	8,790	6,962	5,900	4,673	3,961	3,484	3,137
2	2.067	164,657	110,532	87,546	74,198	65,264	58,768	53,783	49,808	46,547	43,811	38,535	34,700	31,756	29,409	23,293	19,742	17,365	13,754	11,657	9,233	7,825	6,883	6,198

PLASTIC PIPE - Cubic Feet of Gas per Hour, Maximum Capacities

CTS Size (inches)	Nominal Size (inches)	Nominal OD (inches)	Inside Diameter (inches)	Length of Pipe, (feet) 10	20	30	40	50	60	70	80	90	100	125	150	175	200	300	400	500	750	1,000	1,500	2,000
.062 wall CTS Tubing PE 3408																								
3/8	3/8	0.375	0.251	526	353	280	237	209	188	172	159	149	140	123	111	102	94	74	63	56	44	37	30	25
.090 wall CTS Tubing PE 3408																								
1/2	5/8	0.625	0.445	2,506	1,683	1,333	1,129	993	895	819	758	709	667	587	528	483	448	355	301	264	209	177	141	119
.099 wall CTS Tubing PE 2406																								
1	1 1/8	1.125	0.927	18,517	12,430	9,845	8,344	7,339	6,609	6,048	5,601	5,235	4,927	4,334	3,902	3,571	3,307	2,620	2,220	1,953	1,547	1,311	1,038	880
.121 wall CTS Tubing PE 3408																								
1 1/4	1 3/8	1.375	1.133	31,993	21,476	17,010	14,417	12,681	11,419	10,450	9,678	9,044	8,512	7,487	6,742	6,170	5,714	4,526	3,836	3,374	2,672	2,265	1,794	1,520
SDR 11 IPS Pipe PE 3408 / 2406																								
2	2 3/8	2.375	1.943	139,112	93,384	73,964	62,687	55,139	49,651	45,439	42,081	39,326	37,014	32,557	29,317	26,830	24,847	19,680	16,679	14,671	11,620	9,848	7,800	6,611
SDR 11 IPS Pipe PE 3408																								
3	3 1/2	3.500	2.864	400,431	268,804	212,904	180,444	158,716	142,919	130,797	121,130	113,198	106,544	93,714	84,387	77,229	71,521	56,648	48,011	42,230	33,448	28,348	22,453	19,030
4	4 1/2	4.500	3.682	794,063	533,043	422,192	357,825	314,736	283,412	259,372	240,203	224,474	211,278	185,837	167,341	153,147	141,828	112,334	95,207	83,743	66,328	56,215	44,525	37,737
6	6 5/8	6.625	5.421	2,278,467	1,529,504	1,211,429	1,026,735	903,098	813,216	744,237	689,233	644,100	606,237	533,236	480,165	439,436	406,959	322,328	273,186	240,290	190,319	161,303	127,759	108,281
8	8 5/8	8.625	7.057	4,674,834	3,138,152	2,485,544	2,106,598	1,852,928	1,668,512	1,526,985	1,414,130	1,321,529	1,243,845	1,094,065	985,176	901,611	834,976	661,335	560,508	493,013	390,486	330,953	262,128	222,164
SDR 11.5 IPS Pipe PE 2406																								
3	3 1/2	3.500	2.886	408,869	274,468	217,390	184,247	162,060	145,931	133,553	123,682	115,583	108,789	95,689	86,165	78,856	73,028	57,841	49,023	43,120	34,153	28,946	22,926	19,431
SDR 13.5 IPS Pipe PE 2406																								
4	4 1/2	4.500	3.834	886,601	595,163	471,394	399,525	351,415	316,440	289,599	268,196	250,633	235,900	207,494	186,843	170,994	158,357	125,425	106,303	93,502	74,057	62,767	49,714	42,134
6	6 5/8	6.625	5.643	2,541,799	1,706,275	1,351,439	1,145,399	1,007,473	907,203	830,252	768,891	718,541	676,303	594,864	535,659	490,224	453,993	359,581	304,759	268,061	212,315	179,946	142,524	120,795
8	8 5/8	8.625	7.347	5,217,065	3,502,144	2,773,841	2,350,941	2,067,847	1,862,041	1,704,099	1,578,154	1,474,812	1,388,118	1,220,964	1,099,446	1,006,189	931,824	738,043	625,521	550,197	435,779	369,340	292,532	247,933

Variables	Units
Atmospheric Pressure	14.7 psia
Gas Specific Gravity	0.6
Gas Viscosity	7.39E-06 lb/ft sec

Inlet Pressure **40** **psig**

Pressure Drop **4** **psi**

STEEL PIPE - Cubic Feet of Gas per Hour, Maximum Capacities

Nominal Diameter (inches)	Inside Diameter (inches)	Length of Pipe, (feet) 10	20	30	40	50	60	70	80	90	100	125	150	175	200	300	400	500	750	1,000	1,500	2,000	2,500	3,000
1/2	0.622	8,257	5,543	4,390	3,721	3,273	2,947	2,697	2,498	2,334	2,197	1,932	1,740	1,593	1,475	1,168	990	871	690	585	463	392	345	311
3/4	0.824	17,769	11,928	9,447	8,007	7,043	6,342	5,804	5,375	5,023	4,728	4,158	3,745	3,427	3,174	2,514	2,130	1,874	1,484	1,258	996	844	743	669
1	1.049	34,306	23,029	18,240	15,459	13,598	12,244	11,206	10,377	9,698	9,128	8,029	7,230	6,616	6,127	4,853	4,113	3,618	2,866	2,429	1,924	1,630	1,434	1,291
1 1/4	1.380	72,431	48,622	38,511	32,639	28,709	25,852	23,659	21,910	20,476	19,272	16,951	15,264	13,969	12,937	10,247	8,684	7,639	6,050	5,128	4,061	3,442	3,028	2,726
1 1/2	1.610	110,244	74,005	58,615	49,679	43,697	39,348	36,010	33,349	31,165	29,333	25,801	23,233	21,262	19,691	15,596	13,218	11,626	9,209	7,805	6,182	5,239	4,608	4,150
2	2.067	217,800	146,206	115,801	98,146	86,327	77,736	71,142	65,884	61,570	57,950	50,972	45,899	42,006	38,901	30,811	26,114	22,969	18,193	15,419	12,212	10,351	9,104	8,198

PLASTIC PIPE - Cubic Feet of Gas per Hour, Maximum Capacities

CTS Size (inches)	Nominal Size (inches)	Nominal OD (inches)	Inside Diameter (inches)	Length of Pipe, (feet) 10	20	30	40	50	60	70	80	90	100	125	150	175	200	300	400	500	750	1,000	1,500	2,000
.062 wall CTS Tubing PE 3408																								
3/8	3/8	0.375	0.251	696	467	370	314	276	249	227	211	197	185	163	147	134	124	99	83	73	58	49	39	33
.090 wall CTS Tubing PE 3408																								
1/2	5/8	0.625	0.445	3,315	2,226	1,763	1,494	1,314	1,183	1,083	1,003	937	882	776	699	639	592	469	398	350	277	235	186	158
.099 wall CTS Tubing PE 2406																								
1	1 1/8	1.125	0.927	24,493	16,442	13,023	11,037	9,708	8,742	8,000	7,409	6,924	6,517	5,732	5,162	4,724	4,375	3,465	2,937	2,583	2,046	1,734	1,373	1,164
.121 wall CTS Tubing PE 3408																								
1 1/4	1 3/8	1.375	1.133	42,319	28,408	22,500	19,070	16,773	15,104	13,823	12,801	11,963	11,260	9,904	8,918	8,162	7,559	5,987	5,074	4,463	3,535	2,996	2,373	2,011
SDR 11 IPS Pipe PE 3408 / 2406																								
2	2 3/8	2.375	1.943	184,010	123,524	97,836	82,920	72,935	65,676	60,105	55,663	52,018	48,960	43,064	38,778	35,489	32,866	26,031	22,063	19,406	15,370	13,027	10,318	8,745
SDR 11 IPS Pipe PE 3408																								
3	3 1/2	3.500	2.864	529,670	355,560	281,618	238,683	209,941	189,046	173,011	160,224	149,733	140,931	123,960	111,623	102,155	94,605	74,931	63,507	55,860	44,243	37,498	29,700	25,172
4	4 1/2	4.500	3.682	1,050,346	705,083	558,454	473,312	416,318	374,883	343,084	317,728	296,922	279,468	245,815	221,350	202,575	187,603	148,589	125,935	110,771	87,735	74,359	58,895	49,916
6	6 5/8	6.625	5.421	3,013,842	2,023,151	1,602,418	1,358,113	1,194,573	1,075,681	984,440	911,683	851,983	801,901	705,338	635,138	581,264	538,305	426,359	361,357	317,843	251,745	213,364	168,993	143,228
8	8 5/8	8.625	7.057	6,183,636	4,150,990	3,287,753	2,786,503	2,450,960	2,207,024	2,019,819	1,870,541	1,748,053	1,645,296	1,447,174	1,303,141	1,192,606	1,104,464	874,781	741,412	652,133	516,516	437,768	346,730	293,868
SDR 11.5 IPS Pipe PE 2406																								
3	3 1/2	3.500	2.886	540,831	363,052	287,552	243,712	214,365	193,030	176,657	163,601	152,888	143,900	126,572	113,975	104,307	96,598	76,510	64,845	57,037	45,175	38,288	30,326	25,702
SDR 13.5 IPS Pipe PE 2406																								
4	4 1/2	4.500	3.834	1,172,752	787,252	623,536	528,472	464,835	418,571	383,067	354,756	331,525	312,037	274,462	247,148	226,183	209,466	165,906	140,612	123,680	97,959	83,024	65,759	55,733
6	6 5/8	6.625	5.643	3,362,165	2,256,975	1,787,616	1,515,076	1,332,635	1,200,002	1,098,216	1,017,050	950,451	894,580	786,857	708,544	648,443	600,519	475,636	403,120	354,578	280,840	238,023	188,524	159,782
8	8 5/8	8.625	7.347	6,900,872	4,632,460	3,669,097	3,109,707	2,735,245	2,463,015	2,254,097	2,087,504	1,950,808	1,836,132	1,615,030	1,454,292	1,330,936	1,232,570	976,246	827,408	727,773	576,426	488,544	386,947	327,953

Variables	Units
Atmospheric Pressure	14.7 psia
Gas Specific Gravity	0.6
Gas Viscosity	7.39E-06 lb/ft sec

Inlet Pressure 50 psig

Pressure Drop 5 psi

STEEL PIPE - Cubic Feet of Gas per Hour, Maximum Capacities

Nominal Diameter (inches)	Inside Diameter (inches)	Length of Pipe, (feet) 10	20	30	40	50	60	70	80	90	100	125	150	175	200	300	400	500	750	1,000	1,500	2,000	2,500	3,000
1/2	0.622	10,326	6,932	5,490	4,653	4,093	3,686	3,373	3,124	2,919	2,748	2,417	2,176	1,992	1,844	1,461	1,238	1,089	863	731	579	491	432	389
3/4	0.824	22,221	14,917	11,815	10,013	8,808	7,931	7,258	6,722	6,282	5,912	5,200	4,683	4,286	3,969	3,144	2,664	2,343	1,856	1,573	1,246	1,056	929	836
1	1.049	42,902	28,800	22,810	19,333	17,005	15,312	14,014	12,978	12,128	11,415	10,041	9,041	8,274	7,663	6,069	5,144	4,525	3,584	3,037	2,406	2,039	1,793	1,615
1 1/4	1.380	90,581	60,806	48,161	40,818	35,903	32,330	29,587	27,401	25,606	24,101	21,199	19,089	17,470	16,179	12,814	10,861	9,553	7,566	6,413	5,079	4,305	3,786	3,410
1 1/2	1.610	137,869	92,549	73,303	62,127	54,646	49,207	45,033	41,705	38,974	36,683	32,266	29,055	26,590	24,625	19,504	16,530	14,540	11,516	9,760	7,731	6,552	5,763	5,189
2	2.067	272,376	182,842	144,818	122,739	107,959	97,215	88,969	82,393	76,998	72,472	63,745	57,401	52,532	48,649	38,532	32,658	28,725	22,751	19,283	15,273	12,944	11,386	10,252

PLASTIC PIPE - Cubic Feet of Gas per Hour, Maximum Capacities

CTS Size (inches)	Nominal Size (inches)	Nominal OD (inches)	Inside Diameter (inches)	Length of Pipe, (feet) 10	20	30	40	50	60	70	80	90	100	125	150	175	200	300	400	500	750	1,000	1,500	2,000
.062 wall CTS Tubing PE 3408																								
3/8	3/8	0.375	0.251	871	585	463	392	345	311	284	263	246	232	204	184	168	156	123	104	92	73	62	49	41
.090 wall CTS Tubing PE 3408																								
1/2	5/8	0.625	0.445	4,146	2,783	2,204	1,868	1,643	1,480	1,354	1,254	1,172	1,103	970	874	800	741	587	497	437	346	294	232	197
.099 wall CTS Tubing PE 2406																								
1	1 1/8	1.125	0.927	30,631	20,562	16,286	13,803	12,141	10,933	10,005	9,266	8,659	8,150	7,169	6,455	5,908	5,471	4,333	3,673	3,230	2,559	2,168	1,718	1,456
.121 wall CTS Tubing PE 3408																								
1 1/4	1 3/8	1.375	1.133	52,923	35,526	28,138	23,848	20,977	18,889	17,287	16,009	14,961	14,081	12,386	11,153	10,207	9,453	7,487	6,345	5,581	4,421	3,747	2,967	2,515
SDR 11 IPS Pipe PE 3408 / 2406																								
2	2 3/8	2.375	1.943	230,120	154,476	122,352	103,698	91,211	82,133	75,166	69,611	65,053	61,229	53,856	48,496	44,382	41,102	32,554	27,591	24,269	19,222	16,291	12,903	10,936
SDR 11 IPS Pipe PE 3408																								
3	3 1/2	3.500	2.864	662,395	444,657	352,186	298,492	262,548	236,418	216,364	200,374	187,253	176,245	155,022	139,593	127,753	118,311	93,707	79,421	69,857	55,330	46,894	37,142	31,479
4	4 1/2	4.500	3.682	1,313,542	881,763	698,392	591,915	520,639	468,821	429,055	397,345	371,325	349,497	307,412	276,816	253,336	234,613	185,823	157,492	138,528	109,720	92,992	73,653	62,424
6	6 5/8	6.625	5.421	3,769,052	2,530,113	2,003,952	1,698,430	1,493,910	1,345,226	1,231,121	1,140,133	1,065,474	1,002,841	882,082	794,291	726,918	673,193	533,197	451,906	397,488	314,827	266,828	211,339	179,118
8	8 5/8	8.625	7.057	7,733,134	5,191,147	4,111,600	3,484,745	3,065,122	2,760,060	2,525,947	2,339,262	2,186,080	2,057,574	1,809,807	1,629,683	1,491,450	1,381,221	1,093,984	927,195	815,545	645,945	547,464	433,614	367,505
SDR 11.5 IPS Pipe PE 2406																								
3	3 1/2	3.500	2.886	676,353	454,026	359,607	304,782	268,081	241,399	220,923	204,596	191,198	179,959	158,289	142,535	130,445	120,804	95,682	81,094	71,329	56,495	47,882	37,925	32,143
SDR 13.5 IPS Pipe PE 2406																								
4	4 1/2	4.500	3.834	1,466,620	984,522	779,782	660,896	581,313	523,457	479,056	443,651	414,599	390,227	343,237	309,076	282,860	261,954	207,478	175,846	154,671	122,506	103,829	82,237	69,699
6	6 5/8	6.625	5.643	4,204,657	2,822,529	2,235,558	1,894,725	1,666,567	1,500,699	1,373,407	1,271,903	1,188,615	1,118,744	984,028	886,091	810,931	750,997	594,820	504,134	443,428	351,213	297,667	235,764	199,820
8	8 5/8	8.625	7.347	8,630,095	5,793,264	4,588,501	3,888,939	3,420,644	3,080,198	2,818,930	2,610,591	2,439,642	2,296,231	2,019,725	1,818,709	1,664,442	1,541,428	1,220,874	1,034,740	910,139	720,867	610,964	483,908	410,132

Variables	Units
Atmospheric Pressure	14.7 psia
Gas Specific Gravity	0.6
Gas Viscosity	7.39E-06 lb/ft sec

Inlet Pressure 60 psig

Pressure Drop 6 psi

STEEL PIPE - Cubic Feet of Gas per Hour, Maximum Capacities

Nominal Diameter (inches)	Inside Diameter (inches)	Length of Pipe, (feet) 10	20	30	40	50	60	70	80	90	100	125	150	175	200	300	400	500	750	1,000	1,500	2,000	2,500	3,000
1/2	0.622	12,444	8,354	6,616	5,608	4,932	4,442	4,065	3,764	3,518	3,311	2,912	2,622	2,400	2,223	1,760	1,492	1,312	1,039	881	698	591	520	468
3/4	0.824	26,779	17,976	14,238	12,067	10,614	9,558	8,747	8,101	7,570	7,125	6,267	5,643	5,165	4,783	3,788	3,211	2,824	2,237	1,896	1,502	1,273	1,119	1,008
1	1.049	51,701	34,706	27,489	23,298	20,492	18,453	16,888	15,640	14,615	13,756	12,100	10,896	9,971	9,234	7,314	6,199	5,452	4,319	3,660	2,899	2,457	2,161	1,946
1 1/4	1.380	109,159	73,277	58,038	49,190	43,266	38,960	35,656	33,020	30,858	29,044	25,547	23,004	21,053	19,497	15,442	13,088	11,512	9,118	7,728	6,121	5,188	4,563	4,109
1 1/2	1.610	166,146	111,531	88,337	74,870	65,854	59,300	54,270	50,259	46,968	44,207	38,884	35,014	32,044	29,675	23,504	19,921	17,522	13,878	11,762	9,316	7,896	6,945	6,254
2	2.067	328,240	220,343	174,521	147,913	130,102	117,153	107,216	99,292	92,790	87,336	76,819	69,173	63,306	58,627	46,435	39,356	34,617	27,418	23,238	18,405	15,599	13,721	12,355

PLASTIC PIPE - Cubic Feet of Gas per Hour, Maximum Capacities

CTS Size (inches)	Nominal Size (inches)	Nominal OD (inches)	Inside Diameter (inches)	Length of Pipe, (feet) 10	20	30	40	50	60	70	80	90	100	125	150	175	200	300	400	500	750	1,000	1,500	2,000
.062 wall CTS Tubing PE 3408																								
3/8	3/8	0.375	0.251	1,050	705	558	473	416	375	343	317	297	279	246	221	202	187	148	126	111	88	74	59	50
.090 wall CTS Tubing PE 3408																								
1/2	5/8	0.625	0.445	4,997	3,354	2,657	2,252	1,980	1,783	1,632	1,511	1,412	1,329	1,169	1,053	964	892	707	599	527	417	354	280	237
.099 wall CTS Tubing PE 2406																								
1	1 1/8	1.125	0.927	36,913	24,779	19,626	16,634	14,631	13,175	12,057	11,166	10,435	9,822	8,639	7,779	7,119	6,593	5,222	4,426	3,893	3,083	2,613	2,070	1,754
.121 wall CTS Tubing PE 3408																								
1 1/4	1 3/8	1.375	1.133	63,777	42,813	33,909	28,740	25,279	22,763	20,832	19,293	18,029	16,969	14,926	13,440	12,300	11,391	9,022	7,647	6,726	5,327	4,515	3,576	3,031
SDR 11 IPS Pipe PE 3408 / 2406																								
2	2 3/8	2.375	1.943	277,318	186,159	147,446	124,966	109,918	98,978	90,583	83,888	78,395	73,787	64,901	58,442	53,485	49,532	39,231	33,250	29,246	23,164	19,633	15,550	13,179
SDR 11 IPS Pipe PE 3408																								
3	3 1/2	3.500	2.864	798,253	535,856	424,420	359,713	316,397	284,907	260,741	241,470	225,658	212,393	186,817	168,224	153,955	142,577	112,926	95,710	84,185	66,678	56,512	44,760	37,936
4	4 1/2	4.500	3.682	1,582,950	1,062,613	841,633	713,317	627,422	564,976	517,054	478,840	447,484	421,180	370,462	333,591	305,296	282,732	223,935	189,794	166,940	132,223	112,064	88,759	75,227
6	6 5/8	6.625	5.421	4,542,086	3,049,040	2,414,964	2,046,779	1,800,311	1,621,132	1,483,625	1,373,974	1,284,003	1,208,524	1,062,997	957,200	876,009	811,266	642,556	544,592	479,013	379,398	321,555	254,685	215,856
8	8 5/8	8.625	7.057	9,319,204	6,255,853	4,954,891	4,199,468	3,693,780	3,326,150	3,044,020	2,819,045	2,634,446	2,479,584	2,180,999	1,963,932	1,797,347	1,664,511	1,318,360	1,117,363	982,813	778,428	659,749	522,548	442,881
SDR 11.5 IPS Pipe PE 2406																								
3	3 1/2	3.500	2.886	815,073	547,147	433,363	367,292	323,064	290,911	266,235	246,558	230,413	216,869	190,754	171,769	157,199	145,581	115,306	97,726	85,958	68,083	57,703	45,703	38,735
SDR 13.5 IPS Pipe PE 2406																								
4	4 1/2	4.500	3.834	1,767,425	1,186,448	939,715	796,446	700,540	630,818	577,311	534,643	499,634	470,263	413,635	372,468	340,874	315,681	250,032	211,912	186,395	147,632	125,124	99,103	83,994
6	6 5/8	6.625	5.643	5,067,035	3,401,431	2,694,072	2,283,334	2,008,381	1,808,493	1,655,093	1,532,771	1,432,400	1,348,199	1,185,852	1,067,828	977,253	905,027	716,818	607,532	534,375	423,247	358,719	284,120	240,803
8	8 5/8	8.625	7.347	10,400,132	6,981,466	5,529,605	4,686,562	4,122,219	3,711,948	3,397,093	3,146,025	2,940,014	2,767,189	2,433,972	2,191,727	2,005,820	1,857,576	1,471,276	1,246,965	1,096,809	868,718	736,273	583,158	494,250

Variables	Units
Atmospheric Pressure	14.7 psia
Gas Specific Gravity	0.6
Gas Viscosity	7.39E-06 lb/ft sec

Inlet Pressure 70 psig

Pressure Drop 7 psi

STEEL PIPE - Cubic Feet of Gas per Hour, Maximum Capacities

Nominal Diameter (inches)	Inside Diameter (inches)	Length of Pipe, (feet) 10	20	30	40	50	60	70	80	90	100	125	150	175	200	300	400	500	750	1,000	1,500	2,000	2,500	3,000
1/2	0.622	14,606	9,805	7,766	6,582	5,789	5,213	4,771	4,418	4,129	3,886	3,418	3,078	2,817	2,609	2,066	1,751	1,540	1,220	1,034	819	694	611	550
3/4	0.824	31,431	21,099	16,711	14,164	12,458	11,218	10,267	9,508	8,885	8,363	7,356	6,624	6,062	5,614	4,446	3,769	3,315	2,625	2,225	1,762	1,494	1,314	1,183
1	1.049	60,683	40,736	32,264	27,345	24,052	21,659	19,821	18,357	17,155	16,146	14,202	12,788	11,704	10,839	8,585	7,276	6,400	5,069	4,296	3,403	2,884	2,537	2,284
1 1/4	1.380	128,122	86,007	68,121	57,735	50,783	45,729	41,850	38,757	36,219	34,090	29,985	27,001	24,710	22,884	18,125	15,362	13,512	10,702	9,070	7,184	6,089	5,356	4,823
1 1/2	1.610	195,009	130,907	103,684	87,876	77,294	69,601	63,698	58,990	55,127	51,887	45,639	41,096	37,610	34,831	27,587	23,381	20,566	16,289	13,806	10,935	9,268	8,152	7,340
2	2.067	385,263	258,622	204,839	173,609	152,704	137,506	125,842	116,542	108,910	102,508	90,164	81,190	74,304	68,812	54,502	46,193	40,630	32,181	27,275	21,603	18,309	16,104	14,501

PLASTIC PIPE - Cubic Feet of Gas per Hour, Maximum Capacities

CTS Size (inches)	Nominal Size (inches)	Nominal OD (inches)	Inside Diameter (inches)	Length of Pipe, (feet) 10	20	30	40	50	60	70	80	90	100	125	150	175	200	300	400	500	750	1,000	1,500	2,000
.062 wall CTS Tubing PE 3408																								
3/8	3/8	0.375	0.251	1,232	827	655	555	488	440	402	373	348	328	288	260	238	220	174	148	130	103	87	69	59
.090 wall CTS Tubing PE 3408																								
1/2	5/8	0.625	0.445	5,865	3,937	3,118	2,643	2,324	2,093	1,916	1,774	1,658	1,560	1,373	1,236	1,131	1,047	830	703	618	490	415	329	279
.099 wall CTS Tubing PE 2406																								
1	1 1/8	1.125	0.927	43,326	29,084	23,036	19,524	17,173	15,464	14,152	13,106	12,248	11,528	10,140	9,130	8,356	7,738	6,129	5,195	4,569	3,619	3,067	2,429	2,059
.121 wall CTS Tubing PE 3408																								
1 1/4	1 3/8	1.375	1.133	74,857	50,250	39,800	33,732	29,670	26,717	24,451	22,644	21,161	19,917	17,519	15,775	14,437	13,370	10,590	8,975	7,894	6,253	5,299	4,197	3,557
SDR 11 IPS Pipe PE 3408 / 2406																								
2	2 3/8	2.375	1.943	325,494	218,500	173,061	146,676	129,014	116,173	106,319	98,461	92,014	86,605	76,176	68,595	62,776	58,137	46,047	39,026	34,327	27,188	23,043	18,251	15,469
SDR 11 IPS Pipe PE 3408																								
3	3 1/2	3.500	2.864	936,928	628,947	498,151	422,203	371,363	334,402	306,038	283,419	264,860	249,291	219,272	197,448	180,700	167,345	132,544	112,337	98,809	78,261	66,329	52,536	44,526
4	4 1/2	4.500	3.682	1,857,945	1,247,213	987,844	837,237	736,419	663,126	606,878	562,026	525,223	494,348	434,820	391,544	358,332	331,849	262,838	222,766	195,941	155,193	131,532	104,179	88,296
6	6 5/8	6.625	5.421	5,331,151	3,578,728	2,834,499	2,402,351	2,113,067	1,902,760	1,741,364	1,612,665	1,507,063	1,418,473	1,247,664	1,123,488	1,028,192	952,201	754,182	639,200	562,229	445,308	377,417	298,929	253,355
8	8 5/8	8.625	7.057	10,938,164	7,342,639	5,815,669	4,929,013	4,335,475	3,903,979	3,572,836	3,308,778	3,092,110	2,910,345	2,559,889	2,305,112	2,109,588	1,953,674	1,547,390	1,311,475	1,153,551	913,659	774,363	613,327	519,819
SDR 11.5 IPS Pipe PE 2406																								
3	3 1/2	3.500	2.886	956,670	642,199	508,648	431,100	379,188	341,448	312,486	289,391	270,441	254,544	223,892	201,609	184,508	170,872	135,337	114,704	100,891	79,910	67,727	53,643	45,464
SDR 13.5 IPS Pipe PE 2406																								
4	4 1/2	4.500	3.834	2,074,467	1,392,561	1,102,965	934,807	822,240	740,405	677,603	627,523	586,431	551,959	485,493	437,174	400,092	370,522	293,469	248,727	218,776	173,279	146,861	116,320	98,586
6	6 5/8	6.625	5.643	5,947,295	3,992,337	3,162,094	2,680,001	2,357,283	2,122,670	1,942,621	1,799,048	1,681,241	1,582,412	1,391,862	1,253,335	1,147,024	1,062,251	841,346	713,075	627,208	496,774	421,036	333,478	282,636
8	8 5/8	8.625	7.347	12,206,874	8,194,307	6,490,225	5,500,725	4,838,344	4,356,799	3,987,247	3,692,561	3,450,762	3,247,914	2,856,809	2,572,480	2,354,277	2,180,280	1,726,870	1,463,592	1,287,350	1,019,634	864,180	684,466	580,112

Variables	Units
Atmospheric Pressure	14.7 psia
Gas Specific Gravity	0.6
Gas Viscosity	7.39E-06 lb/ft sec

Inlet Pressure 80 psig

Pressure Drop 8 psi

STEEL PIPE - Cubic Feet of Gas per Hour, Maximum Capacities

Nominal Diameter (inches)	Inside Diameter (inches)	Length of Pipe, (feet) 10	20	30	40	50	60	70	80	90	100	125	150	175	200	300	400	500	750	1,000	1,500	2,000	2,500	3,000
1/2	0.622	16,808	11,283	8,936	7,574	6,662	5,999	5,490	5,084	4,751	4,472	3,934	3,542	3,242	3,002	2,378	2,015	1,773	1,404	1,190	942	799	703	633
3/4	0.824	36,169	24,279	19,230	16,298	14,336	12,909	11,814	10,941	10,224	9,623	8,465	7,622	6,976	6,460	5,117	4,337	3,814	3,021	2,561	2,028	1,719	1,512	1,361
1	1.049	69,830	46,876	37,128	31,467	27,678	24,923	22,809	21,124	19,740	18,580	16,343	14,716	13,468	12,472	9,879	8,373	7,364	5,833	4,944	3,916	3,319	2,919	2,628
1 1/4	1.380	147,435	98,971	78,389	66,438	58,438	52,621	48,158	44,599	41,678	39,228	34,505	31,070	28,435	26,333	20,857	17,677	15,549	12,315	10,438	8,267	7,007	6,163	5,550
1 1/2	1.610	224,404	150,639	119,312	101,122	88,945	80,093	73,299	67,882	63,437	59,708	52,518	47,291	43,280	40,081	31,746	26,906	23,666	18,744	15,887	12,583	10,664	9,380	8,447
2	2.067	443,335	297,605	235,715	199,778	175,721	158,232	144,811	134,108	125,326	117,959	103,755	93,429	85,504	79,184	62,717	53,155	46,755	37,032	31,386	24,859	21,069	18,532	16,687

PLASTIC PIPE - Cubic Feet of Gas per Hour, Maximum Capacities

CTS Size (inches)	Nominal Size (inches)	Nominal OD (inches)	Inside Diameter (inches)	Length of Pipe, (feet) 10	20	30	40	50	60	70	80	90	100	125	150	175	200	300	400	500	750	1,000	1,500	2,000
.062 wall CTS Tubing PE 3408																								
3/8	3/8	0.375	0.251	1,418	952	754	639	562	506	463	429	401	377	332	299	273	253	201	170	149	118	100	79	67
.090 wall CTS Tubing PE 3408																								
1/2	5/8	0.625	0.445	6,749	4,530	3,588	3,041	2,675	2,409	2,204	2,041	1,908	1,796	1,579	1,422	1,302	1,205	955	809	712	564	478	378	321
.099 wall CTS Tubing PE 2406																								
1	1 1/8	1.125	0.927	49,856	33,468	26,508	22,467	19,761	17,794	16,285	15,082	14,094	13,265	11,668	10,507	9,616	8,905	7,053	5,978	5,258	4,164	3,530	2,796	2,369
.121 wall CTS Tubing PE 3408																								
1 1/4	1 3/8	1.375	1.133	86,140	57,825	45,800	38,817	34,143	30,745	28,137	26,057	24,351	22,920	20,160	18,153	16,613	15,386	12,186	10,328	9,084	7,195	6,098	4,830	4,094
SDR 11 IPS Pipe PE 3408 / 2406																								
2	2 3/8	2.375	1.943	374,557	251,435	199,147	168,785	148,460	133,684	122,345	113,303	105,884	99,659	87,659	78,934	72,239	66,900	52,987	44,909	39,501	31,287	26,517	21,002	17,800
SDR 11 IPS Pipe PE 3408																								
3	3 1/2	3.500	2.864	1,078,154	723,750	573,240	485,844	427,340	384,808	352,168	326,140	304,784	286,867	252,323	227,211	207,938	192,570	152,523	129,270	113,703	90,058	76,327	60,454	51,238
4	4 1/2	4.500	3.682	2,138,000	1,435,210	1,136,745	963,437	847,423	763,081	698,355	646,742	604,391	568,863	500,362	450,563	412,345	381,870	302,457	256,344	225,476	178,586	151,359	119,882	101,605
6	6 5/8	6.625	5.421	6,134,735	4,118,163	3,261,753	2,764,467	2,431,577	2,189,570	2,003,847	1,855,748	1,734,229	1,632,284	1,435,729	1,292,836	1,183,175	1,095,730	867,863	735,549	646,976	512,431	434,306	343,988	291,544
8	8 5/8	8.625	7.057	12,586,914	8,449,422	6,692,287	5,671,981	4,988,977	4,492,440	4,111,383	3,807,523	3,558,196	3,349,032	2,945,751	2,652,570	2,427,574	2,248,159	1,780,634	1,509,158	1,327,430	1,051,378	891,085	705,776	598,173
SDR 11.5 IPS Pipe PE 2406																								
3	3 1/2	3.500	2.886	1,100,872	739,000	585,318	496,081	436,344	392,916	359,588	333,012	311,206	292,912	257,640	231,998	212,320	196,628	155,737	131,993	116,099	91,955	77,936	61,728	52,317
SDR 13.5 IPS Pipe PE 2406																								
4	4 1/2	4.500	3.834	2,387,160	1,602,467	1,269,219	1,075,714	946,180	852,010	779,740	722,112	674,826	635,158	558,674	503,071	460,399	426,373	337,704	286,218	251,752	199,398	168,998	133,853	113,446
6	6 5/8	6.625	5.643	6,843,753	4,594,117	3,638,728	3,083,968	2,712,605	2,442,628	2,235,440	2,070,225	1,934,661	1,820,935	1,601,663	1,442,254	1,319,920	1,222,368	968,166	820,559	721,750	571,655	484,501	383,744	325,239
8	8 5/8	8.625	7.347	14,046,862	9,429,465	7,468,521	6,329,870	5,567,645	5,013,515	4,588,259	4,249,155	3,970,908	3,737,484	3,287,426	2,960,239	2,709,146	2,508,921	1,987,168	1,684,204	1,481,397	1,173,327	994,442	787,638	667,555

Appendix 2

Weak Link Chart

Material			Weak Link	
Pipe Size	Material Density	SDR	Plastic Pipe Used	Shear Pin Used
1 1/4" ips	PE2406/PE2708	10		800
2"	PE2406/PE2708	11	1 1/4" cts .121"w PE3408	1,450
3"	PE2406/PE2708	12	1 1/4" cts .121"w PE3408	3,050
4"	PE2406/PE2708	14	2" ips SDR 11 PE3408	4,350
6"	PE2406/PE2708	14	3" ips SDR 11 PE3408	9,350
8"	PE2406/PE2708	14	4" ips SDR 11 PE3408	15,850
10"	PE2406/PE2708	14	6" ips SDR 13.5 PE2406	24,650
12"	PE2406/PE2708	14	6" ips SDR 11 PE3408	34,650
1 1/4" cts	PE3408	12		550
2"	PE3408	11	1 1/4" cts .121"w PE3408	1,700
3"	PE3408	11	1 1/4" cts .121"w PE3408	3,650
4"	PE3408	11	2" ips SDR 11 PE3408	6,000
6"	PE3408	11	3" ips SDR 11 PE3408	13,000
6"	PE3408	9	4" ips SDR 13.5 PE2708	15,550
8"	PE3408	11	4" ips SDR 11 PE3408	22,050
8"	PE3408	9	4" ips SDR 11 PE3408	26,350
10"	PE3408	11	6" ips SDR 11 PE3408	34,250
10"	PE3408	9	6" ips SDR 11 PE3408	40,900
12"	PE3408	11	6" ips SDR 11 PE3408	48,150
12"	PE3408	9	8" ips SDR 11 PE3408	57,550
1 1/4" cts	PE4710	12		650
2"	PE4710	11	1 1/4" cts .121"w PE4710	1,950
3"	PE4710	11	2" ips SDR 11 PE2708	4,250
4"	PE4710	11	2" ips SDR 11 PE4710	7,000
6"	PE4710	11	3" ips SDR 11 PE4710	15,200
6"	PE4711	9	4" ips SDR 13.5 PE2708	18,150
8"	PE4710	11	6" ips SDR 13.5 PE2708	25,700
8"	PE4710	9	6" ips SDR 13.5 PE2708	30,700
10"	PE4710	11	6" ips SDR 13.5 PE2708	25,700
10"	PE4710	9	8" ips SDR 13.5 PE2708	47,700
12"	PE4710	11	8" ips SDR 13.5 PE2708	56,150
12"	PE4710	9	10" ips SDR 13.5 PE2708	67,100

Appendix 3

Application Specific Installation Diagrams

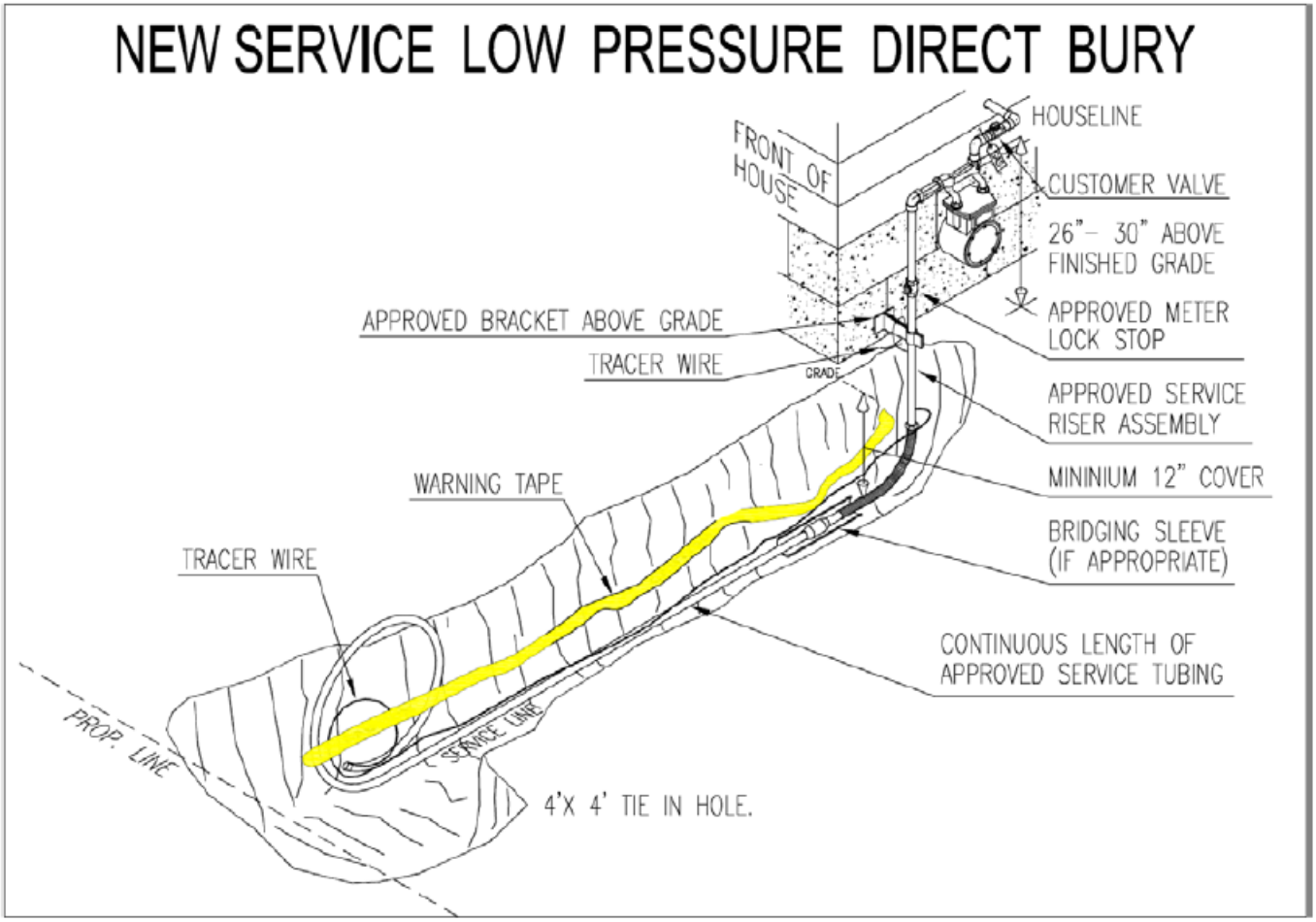

Peoples Requirements

(1) Use only Peoples-approved materials.
(2) Install continuous lengths of service line tubing, Locator wire installed 6” beside or below pipe, and warning tape 6” to 12” below grade. Leave coiled with a length at least 7 feet past property line.
(3) Leave a 4 foot by 4 foot excavation, of sufficient depth, to allow for tie in connection.
(4) Ensure that riser, manifold, and exposed houseline are adequately coated to prevent atmospheric corrosion (Paint and/or Wax wrap).
(5) Properly install bracket to ensure adequate support for meter.
(6) Apply pressure test to installed service and leave for Peoples’ inspection.

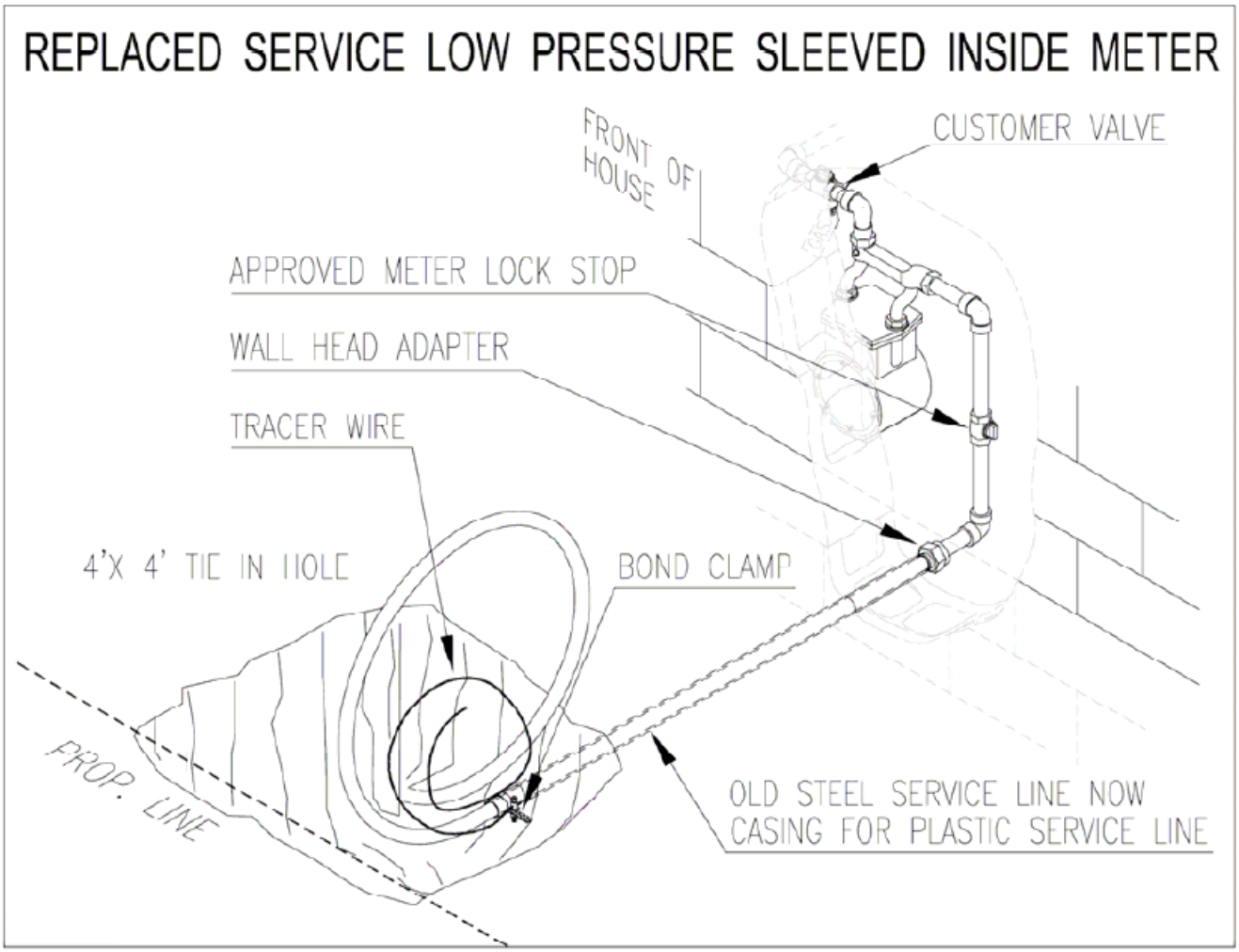

Peoples Requirements

(1) Use only Peoples-approved materials.
(2) Install continuous lengths of service line tubing. Leave coiled with a length at least 7 feet past property line.
(3) Leave a 4 foot by 4 foot excavation, of sufficient depth, to allow for tie in connection.
(4) Ensure that interior service line, upstream of the meter, is adequately coated to prevent atmospheric corrosion (Paint and/or Wax wrap).
(5) Ensure adequate support for meter.
(6) Apply pressure test to installed service and leave for Peoples' inspection.

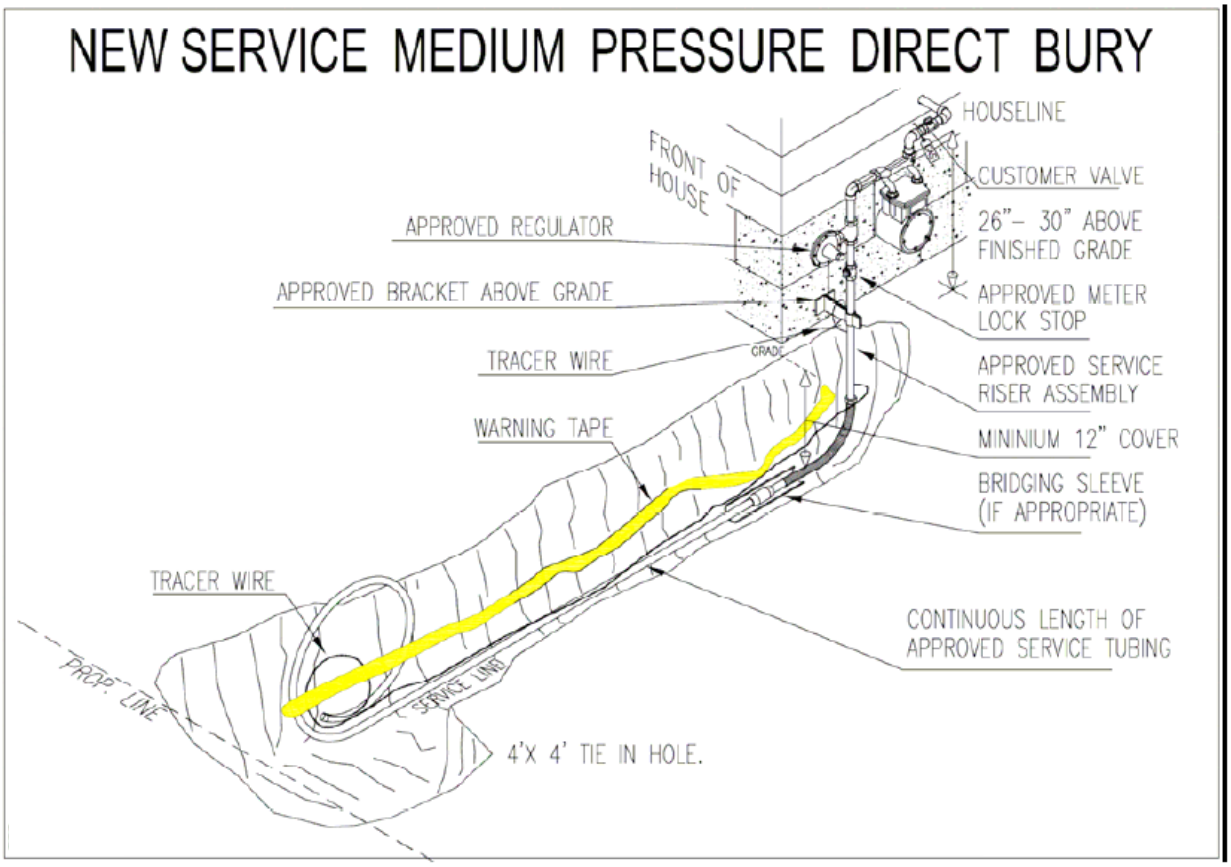

Peoples Requirements

(1) Use only Peoples-approved materials.
(2) Install continuous lengths of service line tubing, Locator wire installed 6” beside or below pipe, and warning tape 6” to 12” below grade. Leave coiled with a length at least 7 feet past property line.
(3) Leave a 4 foot by 4 foot excavation, of sufficient depth, to allow for tie in connection.
(4) Ensure that riser, manifold, and exposed houseline are adequately coated to prevent atmospheric corrosion (Paint and/or Wax wrap).
(5) Properly install bracket to ensure adequate support for meter.
(6) Ensure that regulator relief is pointed downward, unobstructed, and discharges away from building openings and potential ignition sources.
(7) Apply pressure test to installed service and leave for Peoples’ inspection.

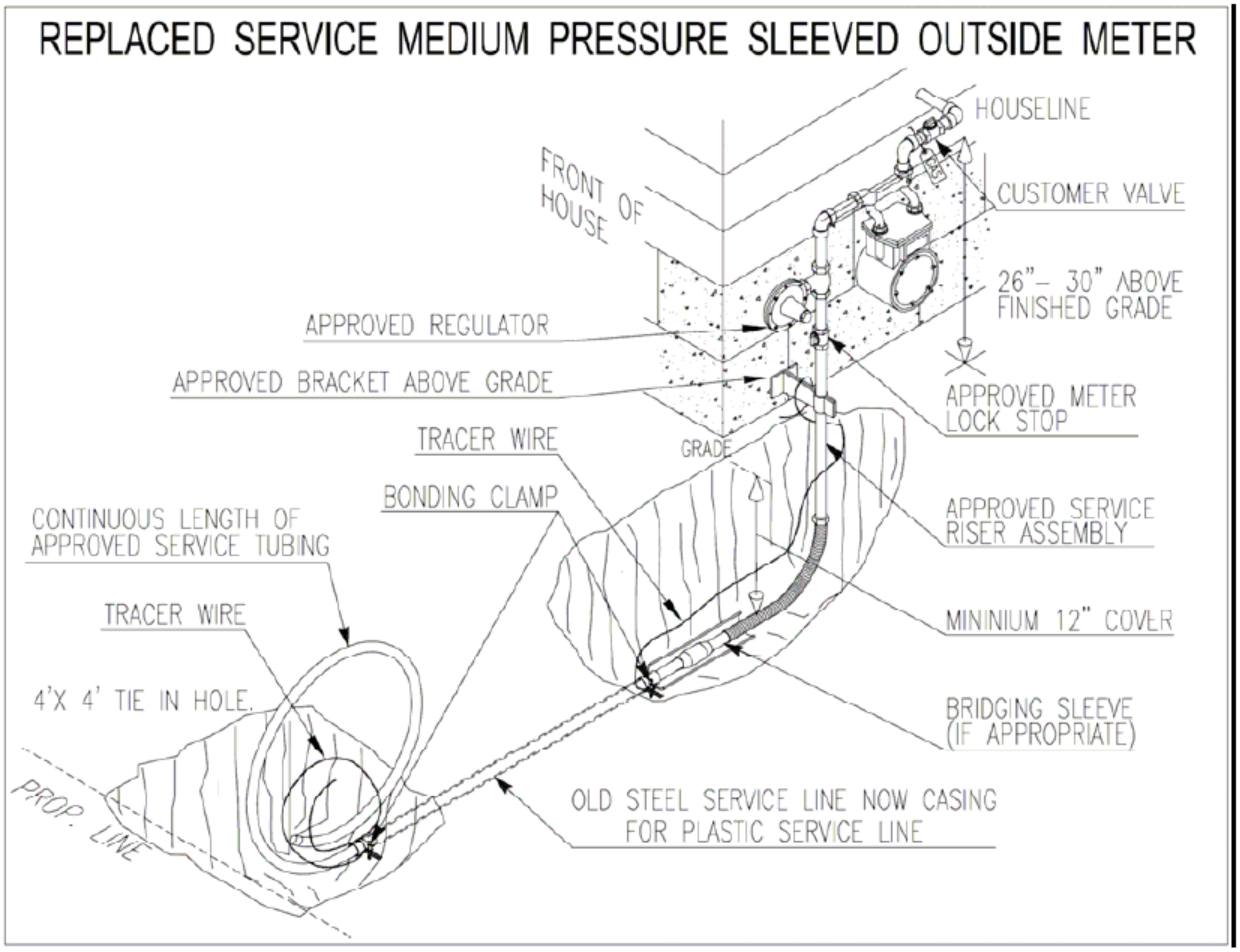

Peoples Requirements:

(1) Use only Peoples-approved materials.
(2) Install continuous length of service line tubing. Leave coiled with a length at least 7 feet past property line.
(3) Leave a 4 foot by 4 foot excavation, of sufficient depth, to allow for tie in connection.
(4) Ensure that riser, manifold, and exposed houseline are adequately coated to prevent atmospheric corrosion. (Paint and/or Wax wrap)
(5) Properly install bracket to ensure adequate support for meter.
(6) Ensure that regulator relief is pointed downward, unobstructed, and discharges away from building openings and potential ignition sources.
(7) SLI to install bonding clamp on existing casing and extend Locator wire up service line riser.
(8) Apply pressure test to installed service and leave for Peoples' inspection.

Appendix 5

Standard Service Line Spotting Practices

Meters to Be Set at Building: New residential or commercial meters regardless of service line lengths should be installed at the structure if the following provisions are met:

1. There is a line of sight between the curb valve and meter
2. 8-gauge copper tracer wire is installed between the meter riser and the curb box. Refer to Peoples Job Procedure 602 and the Appendices of this Manual for proper tracer wire installation techniques.

NOTE: These guidelines do not apply to meters with high-pressure "farm taps".

Building Lots with Existing Gas Taps: The installer shall communicate with the Peoples Natural Gas Engineering Department prior to service line installation to verify the existence of a pre-installed gas tap. If a tap already exists at the new construction site, the service line shall be installed in a straight line from the proposed meter location to existing tap.

Service Lines spotted on the front wall: The Service Line must be perpendicular to the road from the front wall.

Service Lines spotted on the sidewall: The Service Line riser must not be more than 10 feet from the front corner of the building. The Service Line must go out and parallel the foundation at a distance of 3 to 5 feet off the sidewall, and then extend in a direction perpendicular to the road.

Meters considered to be at risk of vehicular damage: Customer must provide bollards or barriers to protect the meter when in close proximately of vehicle traffic (parking lots, driveways, etc.)

Service Lines with an MAOP in excess of 60 psig: A service line with a Maximum Allowable Operating Pressure (MAOP) in excess of 60 psig shall have a meter located in the immediate area of the mainline to allow adequate space for required regulation devices. Installers should consult with a Company representative to determine the meter location when this condition exists.

Buried House Lines Downstream of a Remote Meter: The maximum combined length of the service line (main to meter) and the buried house line (meter to building), shall not exceed 1000 feet without approval by Peoples management.

Standard Service Spotting

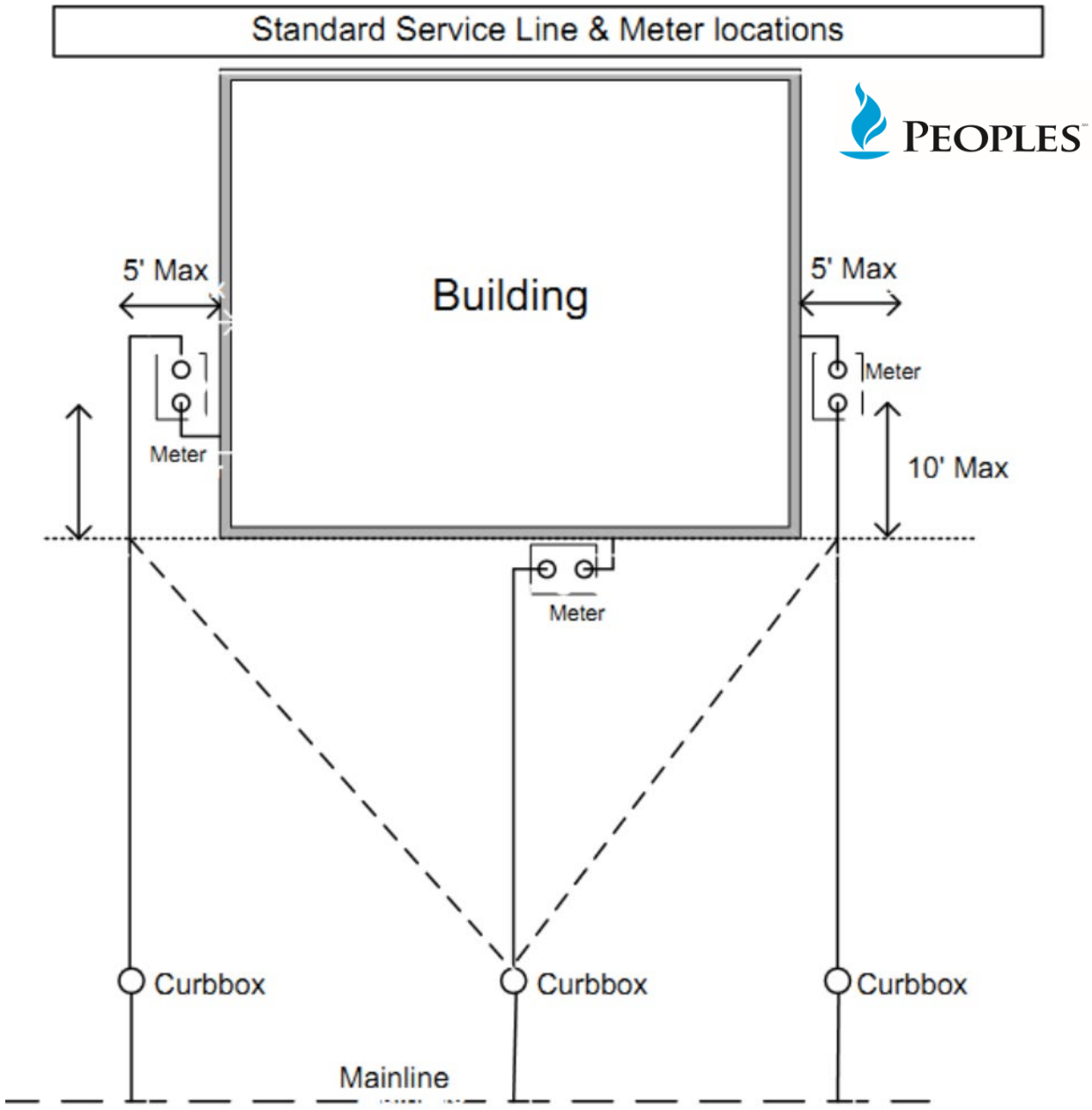

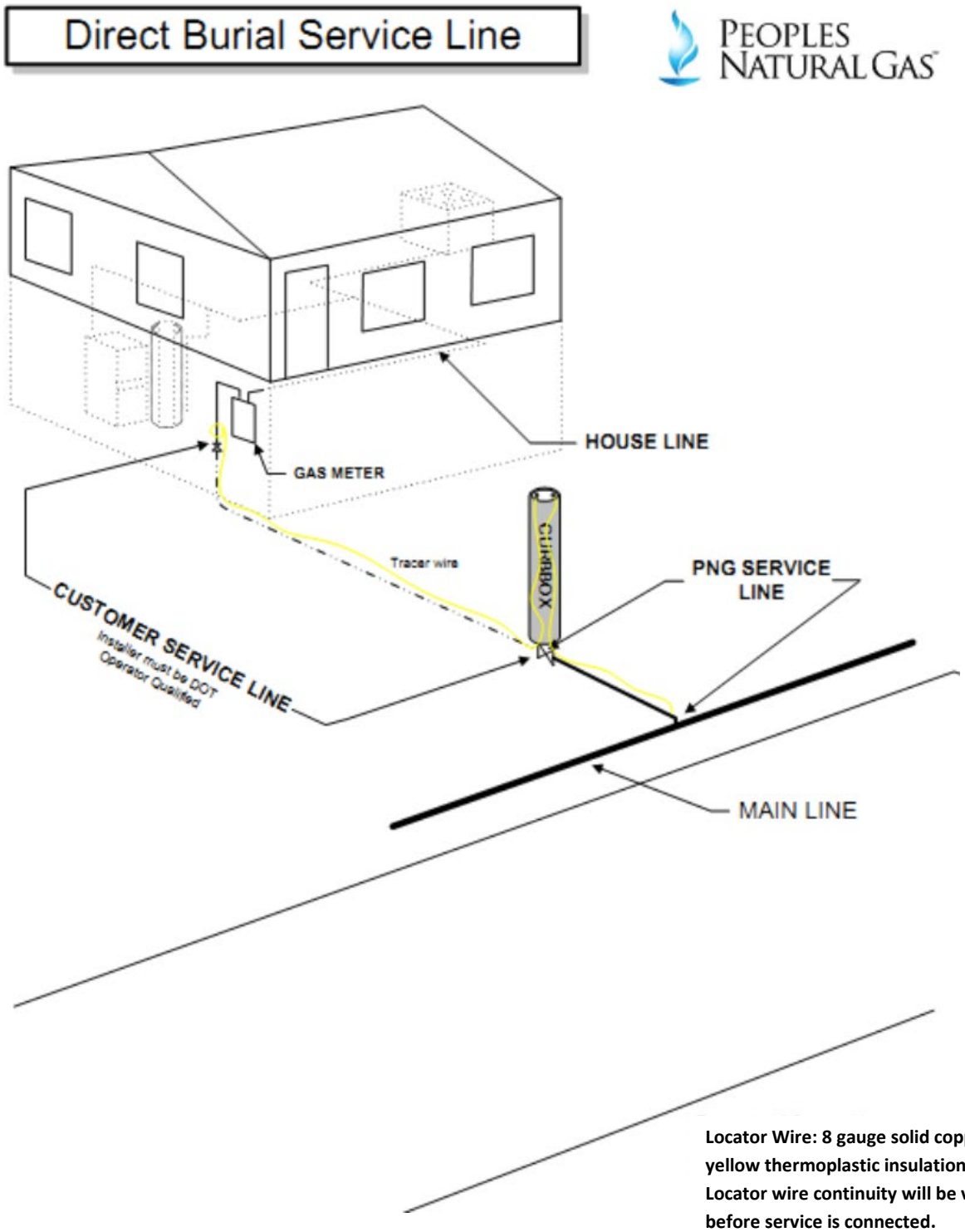

Locator Wire: 8 gauge solid copper, yellow thermoplastic insulation only. Locator wire continuity will be verified before service is connected.

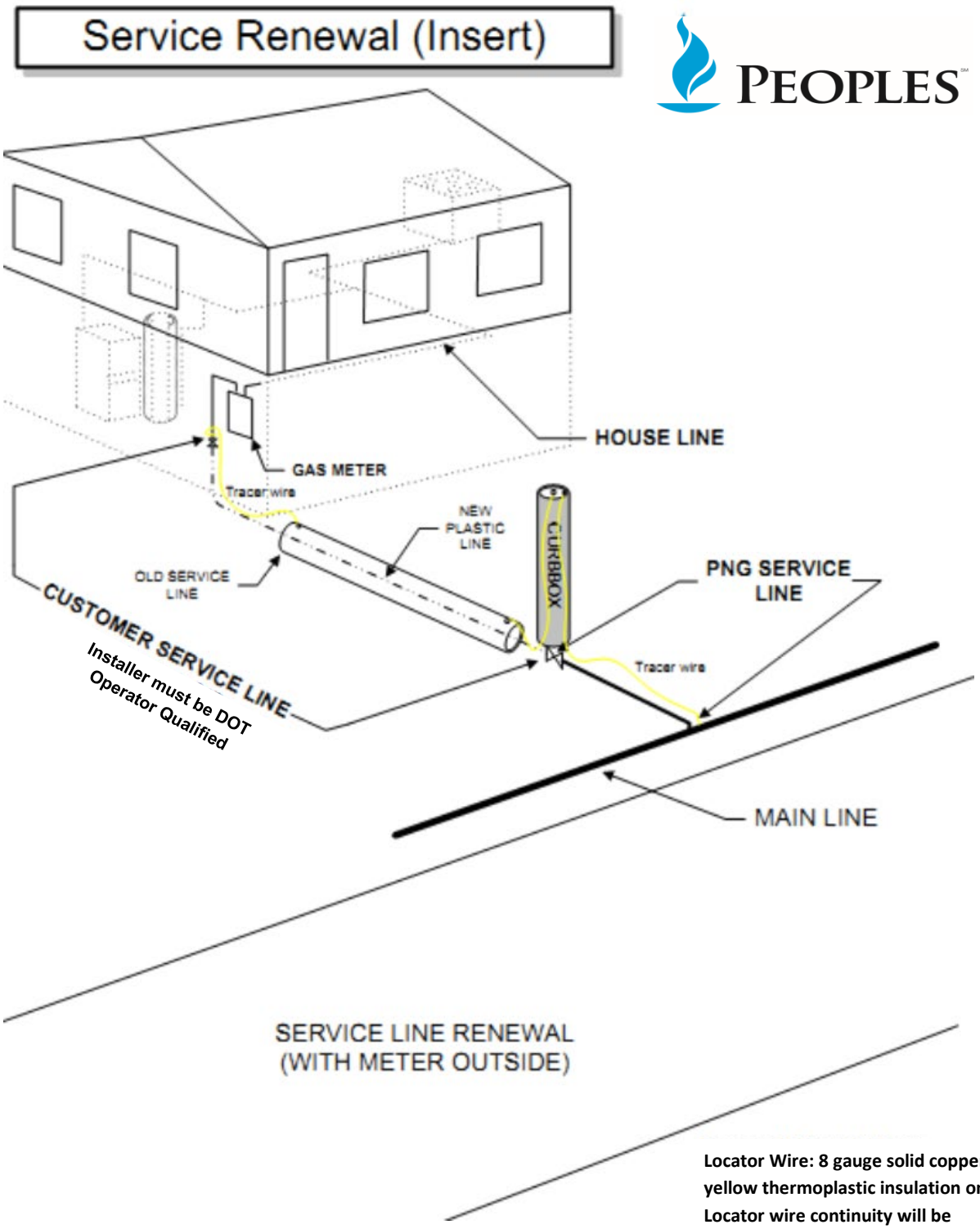

Locator Wire: 8 gauge solid copper, yellow thermoplastic insulation only. Locator wire continuity will be verified before service is connected.

Highway Meter Set

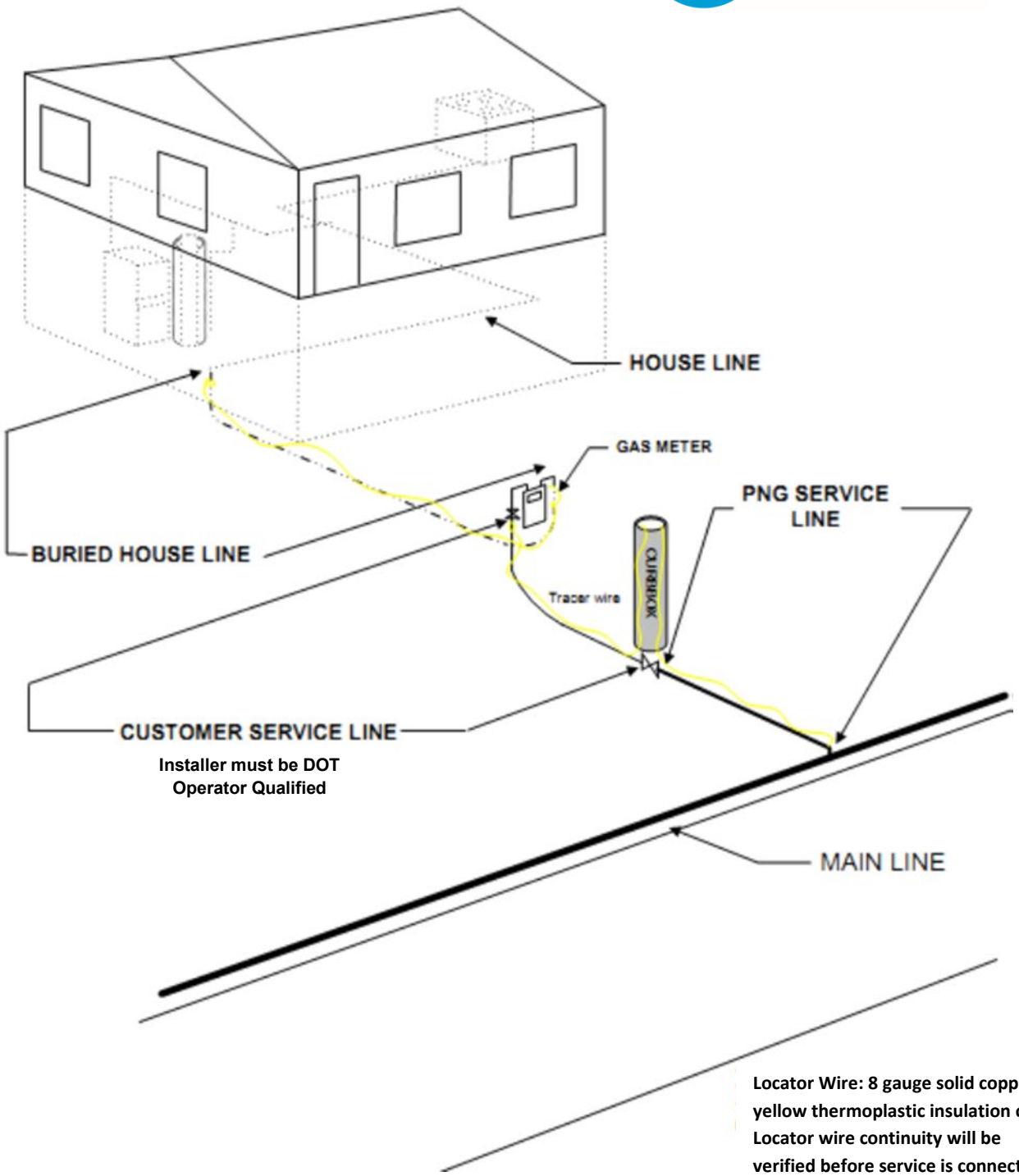

Locator Wire: 8 gauge solid copper, yellow thermoplastic insulation only. Locator wire continuity will be verified before service is connected.

Appendix 6

Meter Installation Measurements

Drawing No. 1

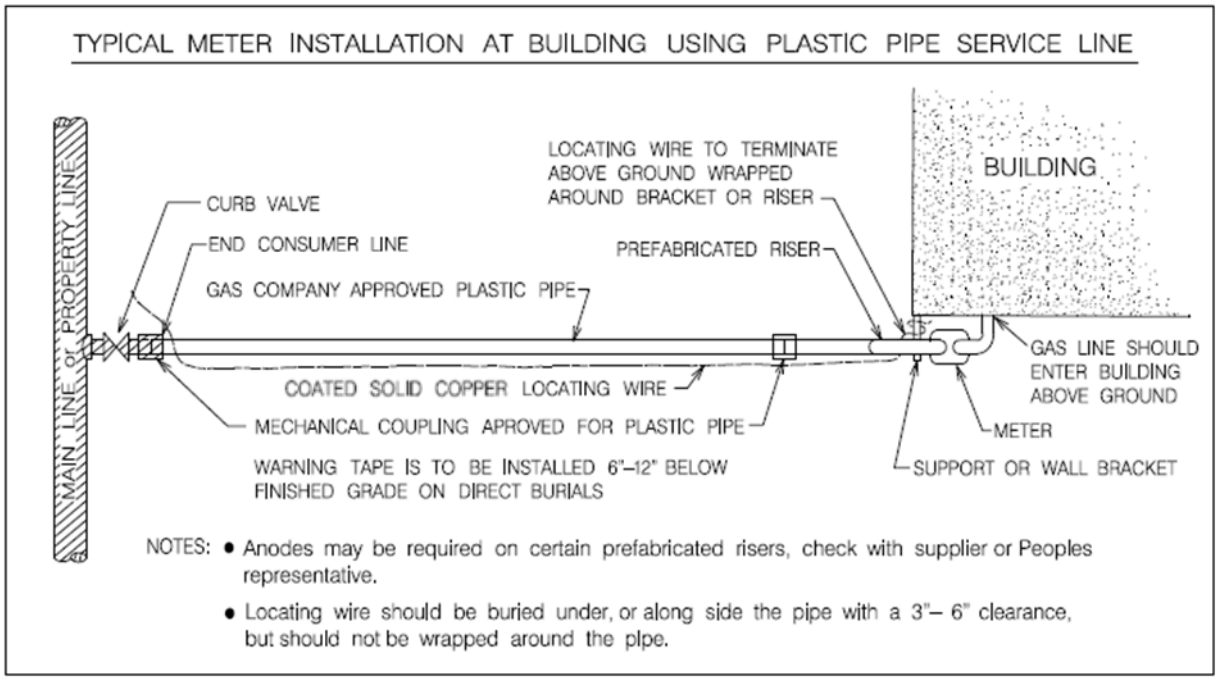

See 192.381 for excess flow valve and curb valve Installation.

SUPPLIED BY GAS COMPANY

Drawing No. 2

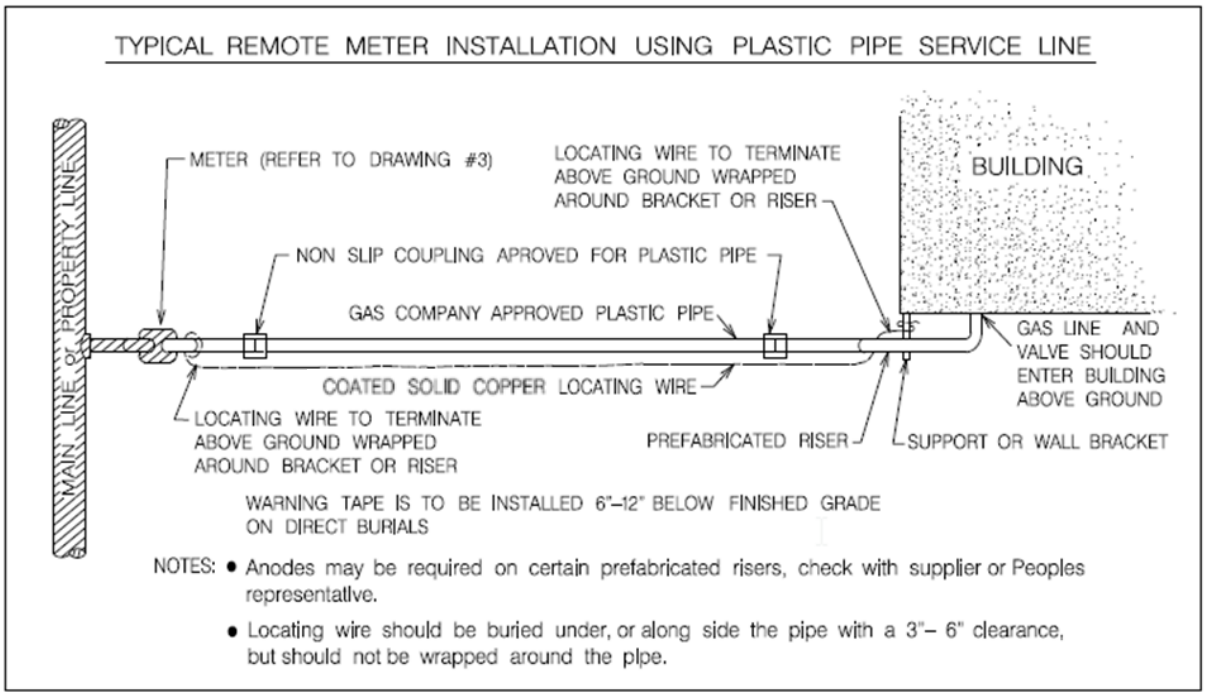

See 192.381 for excess flow valve and curb valve Installation.

SUPPLIED BY GAS COMPANY

Typical Service Line and Meter Set

Drawing No. 3

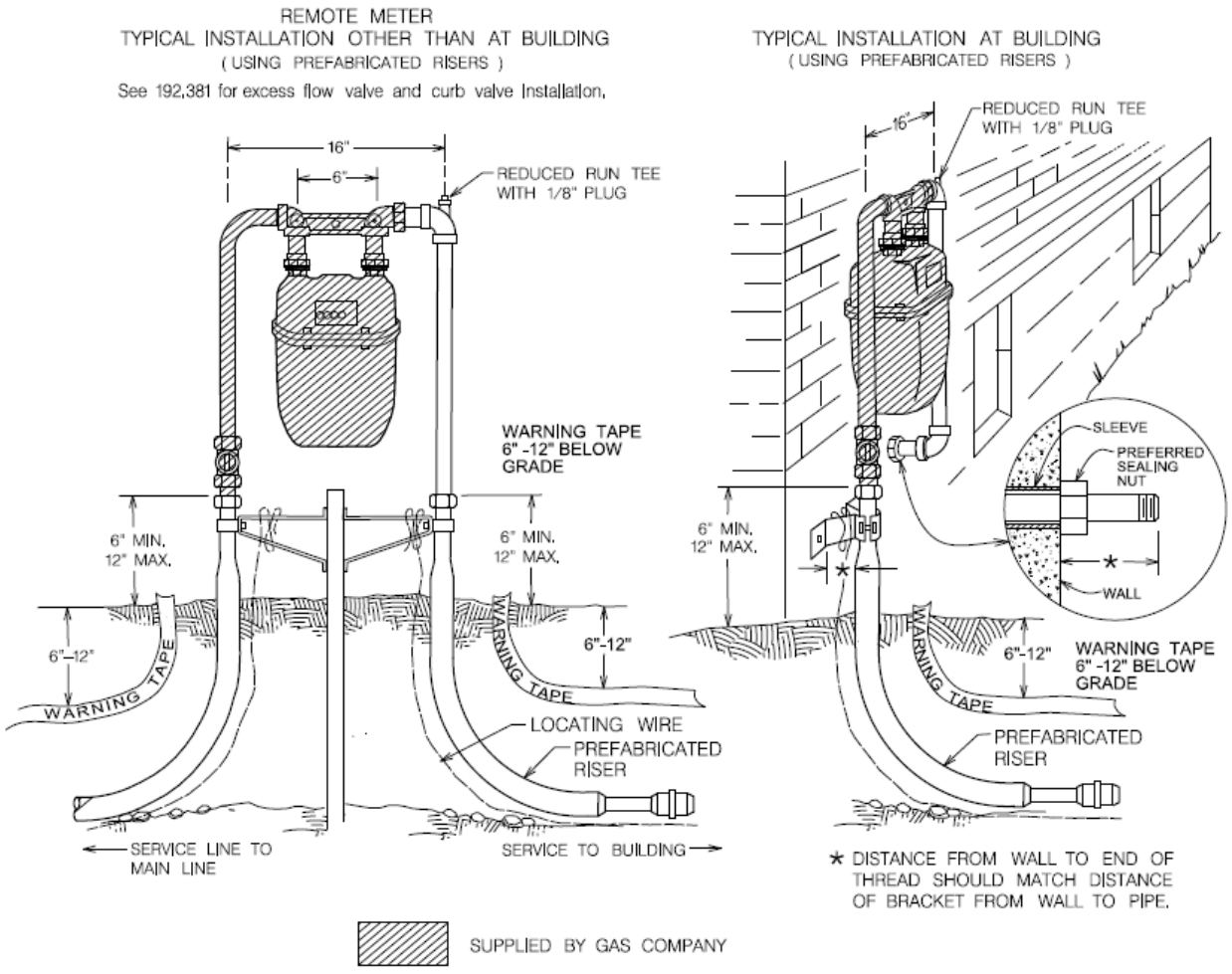

Note: Consumer to end service line 6” to 12” above finished grade. Meter to be installed by Peoples.

A 6-inch wide plastic warning tape will be installed directly above all plastic pipe installations at a level approximately 6 to 12 inches below the final grade.
1. There shall be a minimum of 24 inches of cover on main lines.
2. There shall be a minimum of 18 inches of cover on service lines under a street right-of-way.
3. There shall be a minimum of 12 inches of cover on service lines under private Property.

If an underground structure prevents installation at these depths, the service line must be designed to withstand external loads.

Typical Mobile Home Service Line and Meter Installation

Drawing No. 4

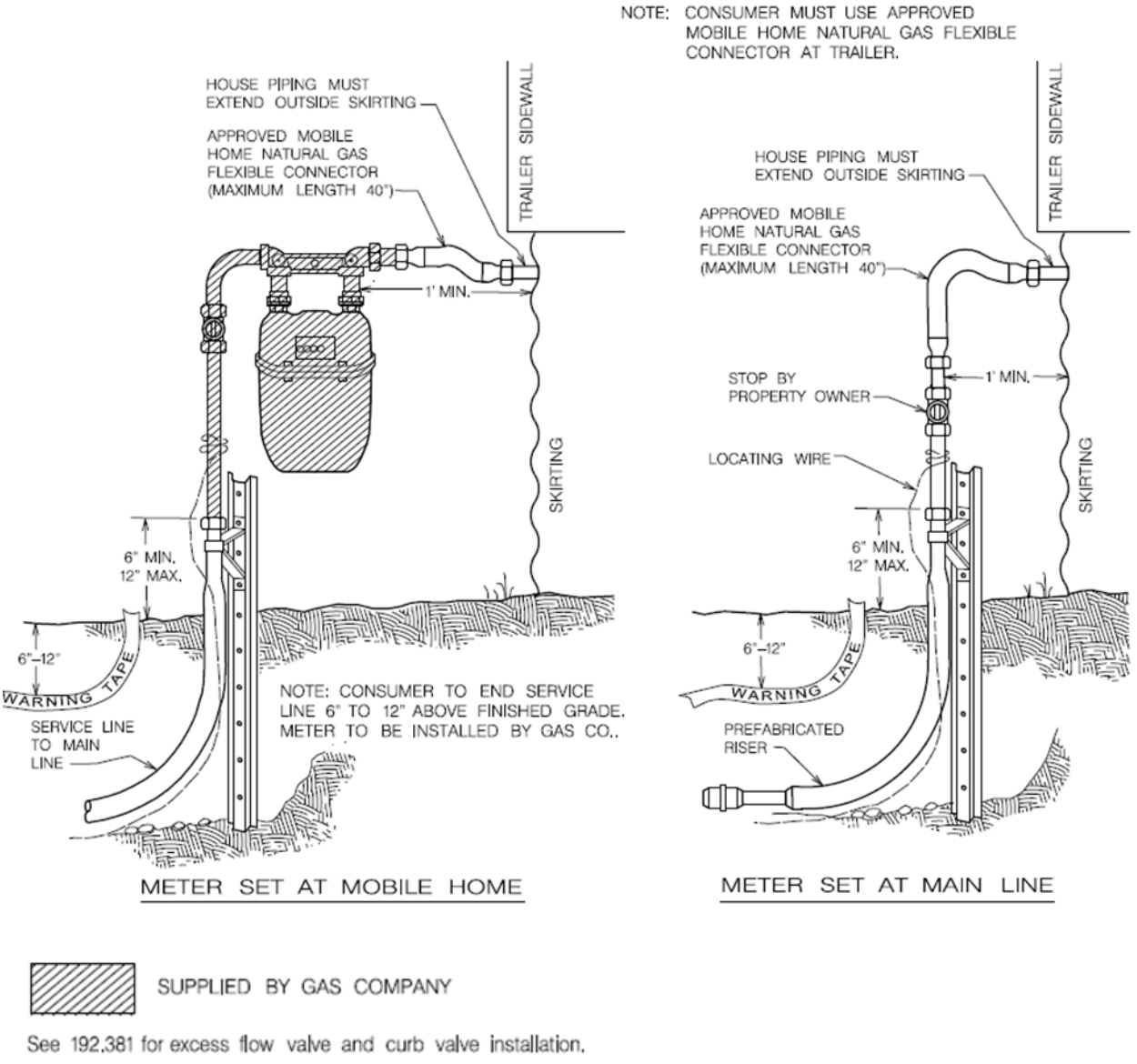

A 6-inch wide plastic warning tape will be installed directly above all plastic pipe installations at a level approximately 6 to 12 inches below the final grade.
1. There shall be a minimum of 24 inches of cover on main lines.
2. There shall be a minimum of 18 inches of cover on service lines under a street right-of-way.
3. There shall be a minimum of 12 inches of cover on service lines under private Property.

If an underground structure prevents installation at these depths, the service line must be designed to withstand external loads.

Drawing No. 5

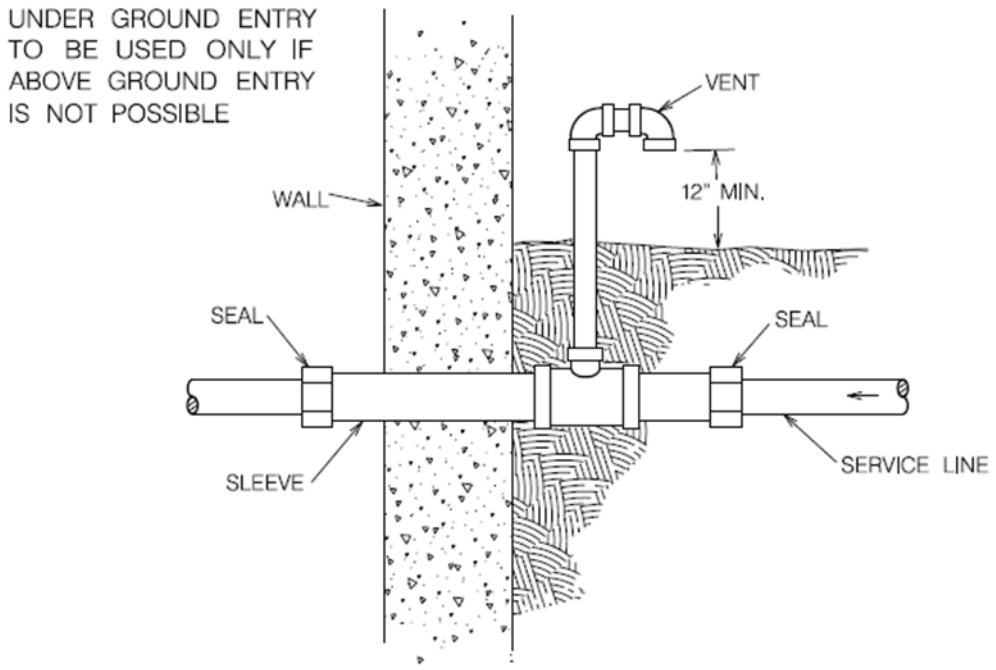

Drawing No. 5-A

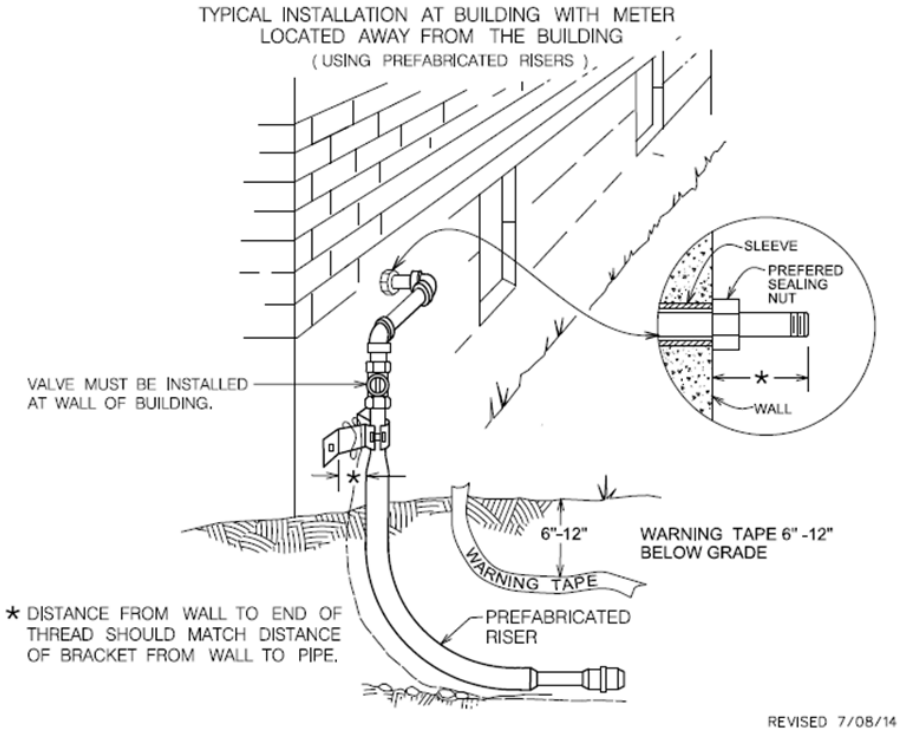

Drawing No. 6

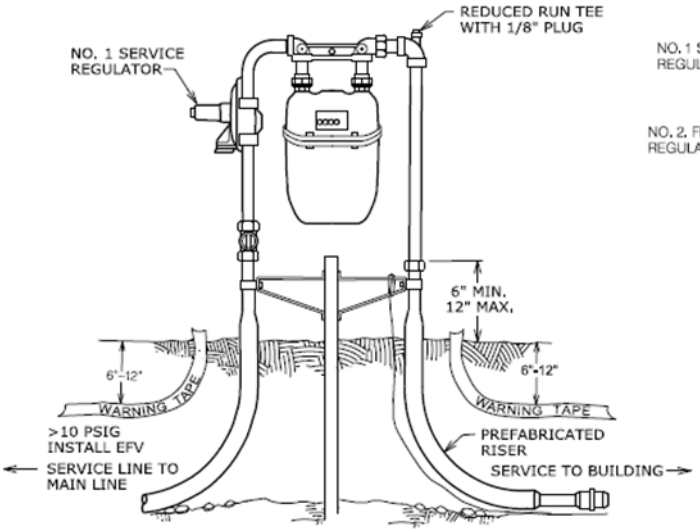

INLET PRESSURE UP TO 60#

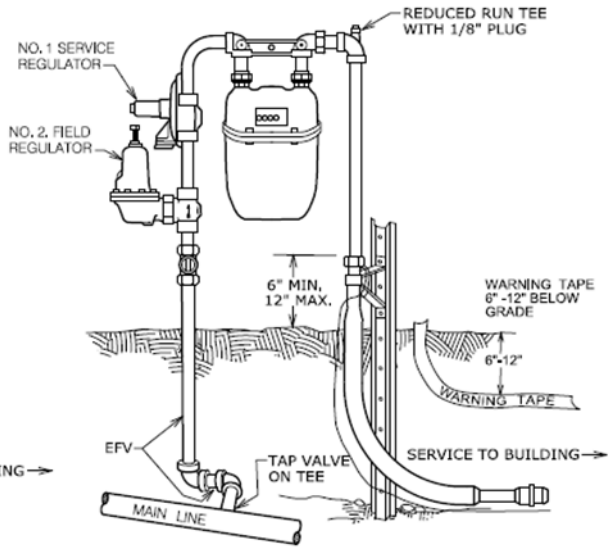

METER AND REGULATORS SHALL SET AT OR NEAR MAIN LINE

INLET PRESSURE 60# TO 250#

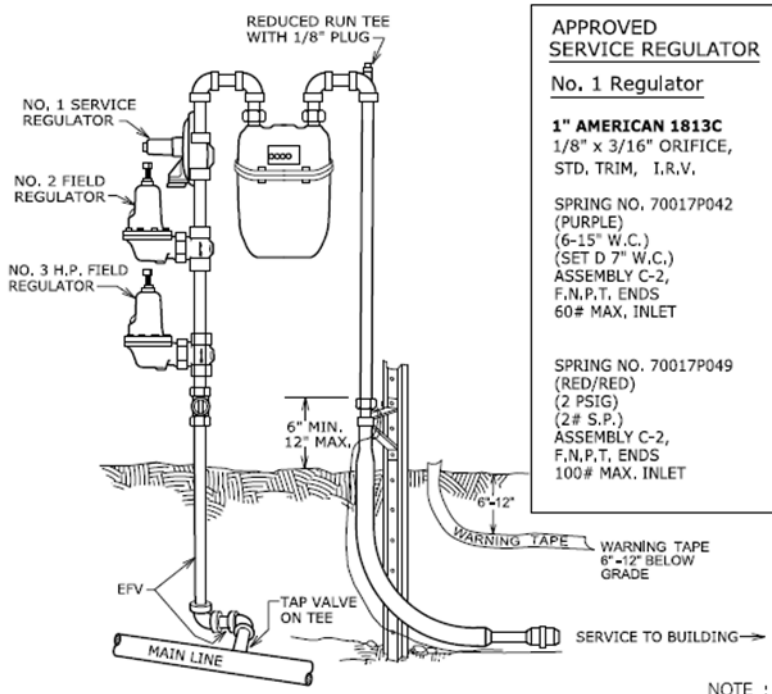

METER AND REGULATORS SHALL SET AT OR NEAR MAIN LINE

INLET PRESSURE 250# TO 1,000#

APPROVED SERVICE REGULATOR	APPROVED FIELD REGULATOR	APPROVED H.P. FIELD REGULATOR
No. 1 Regulator	No. 2 Regulator	No. 3 Regulator
1" AMERICAN 1813C 1/8" x 3/16" ORIFICE, STD. TRIM, I.R.V. SPRING NO. 70017P042 (PURPLE) (6-15" W.C.) (SET D 7" W.C.) ASSEMBLY C-2, F.N.P.T. ENDS 60# MAX. INLET SPRING NO. 70017P049 (RED/RED) (2 PSIG) (2# S.P.) ASSEMBLY C-2, F.N.P.T. ENDS 100# MAX. INLET	**1" FISHER 627R** D.I. BODY, 1000# I.R. NITRILE VALVE DISK S.S. SEAT RING S.S. DISK HOLDER GREEN SPRING 40# SET POINT 3/16" ORIFICE POSITION 1 F.N.P.T. ENDS	**1" FISHER 627R** D.I. BODY, 1000# I.R. NITRILE VALVE DISK S.S. SEAT RING S.S. DISK HOLDER RED SPRING 100# SET POINT 1/8" ORIFICE POSITION 1 F.N.P.T. ENDS

NOTE : CONSUMER TO END SERVICE LINE 6" TO 12" ABOVE GROUND LEVEL. REGULATORS AND METER TO BE INSTALLED BY GAS CO.

TYPICAL METER AND REGULATOR INSTALLATION

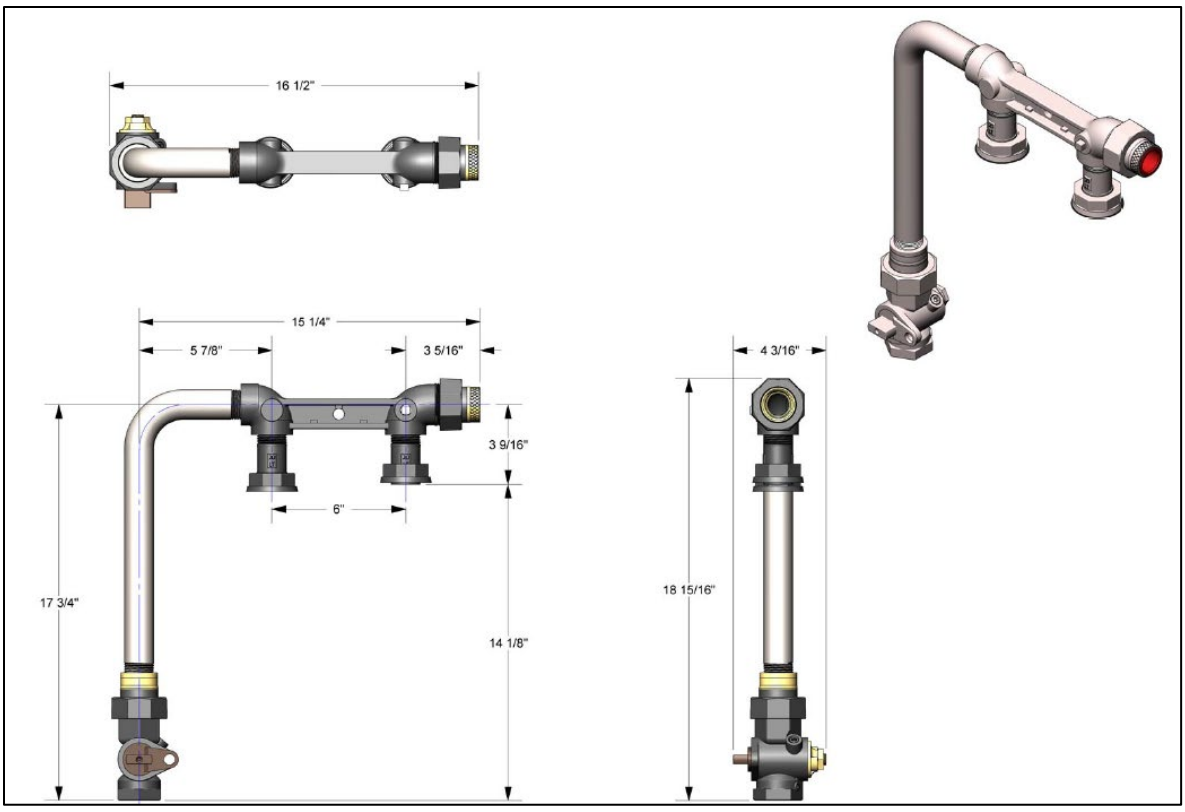
16 1/2"
15 1/4"
5 7/8"
3 5/16"
3 9/16"
6"
17 3/4"
14 1/8"
4 3/16"
18 15/16"

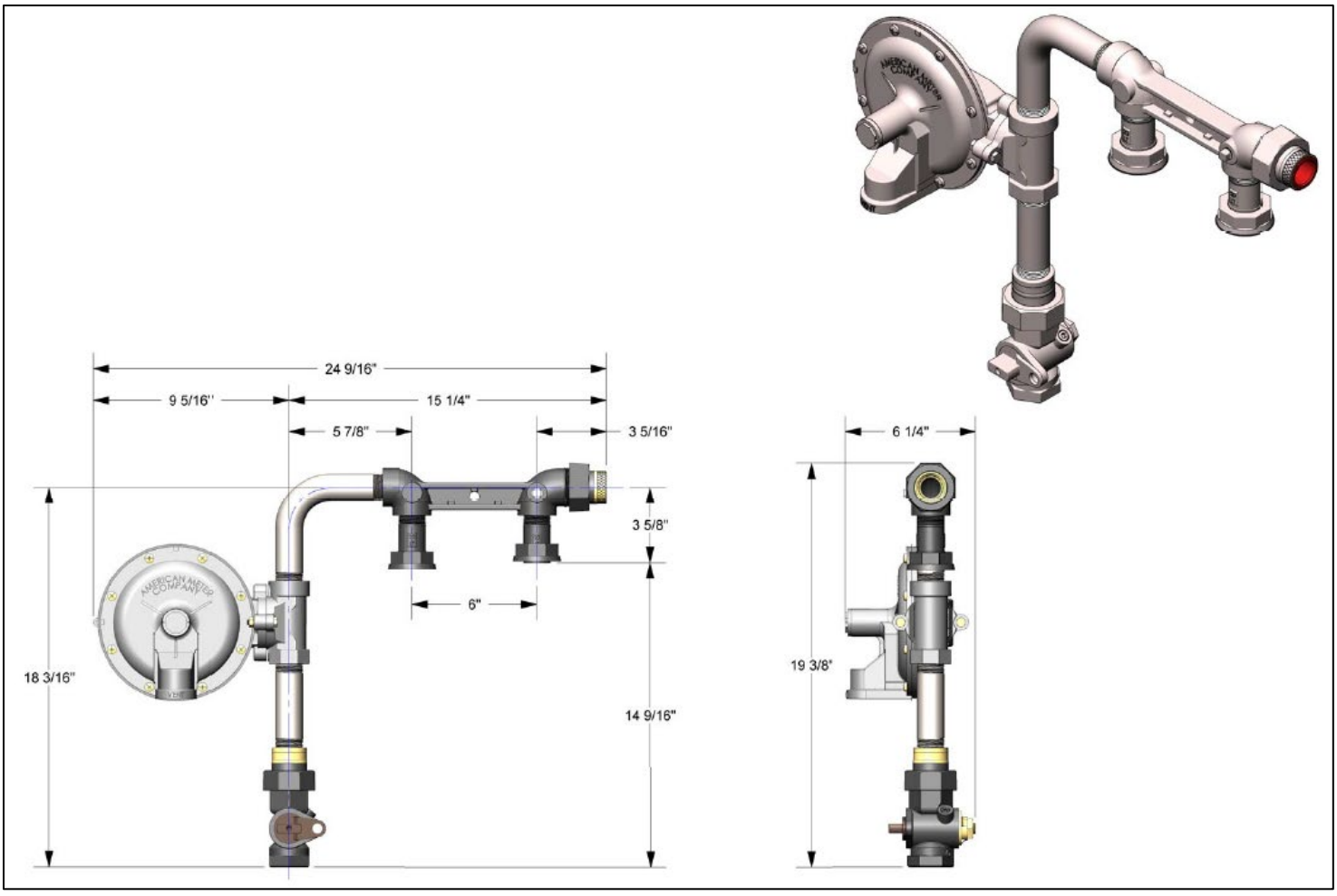
24 9/16"
9 5/16"
15 1/4"
5 7/8"
3 5/16"
3 5/8"
6"
18 3/16"
14 9/16"
6 1/4"
19 3/8"

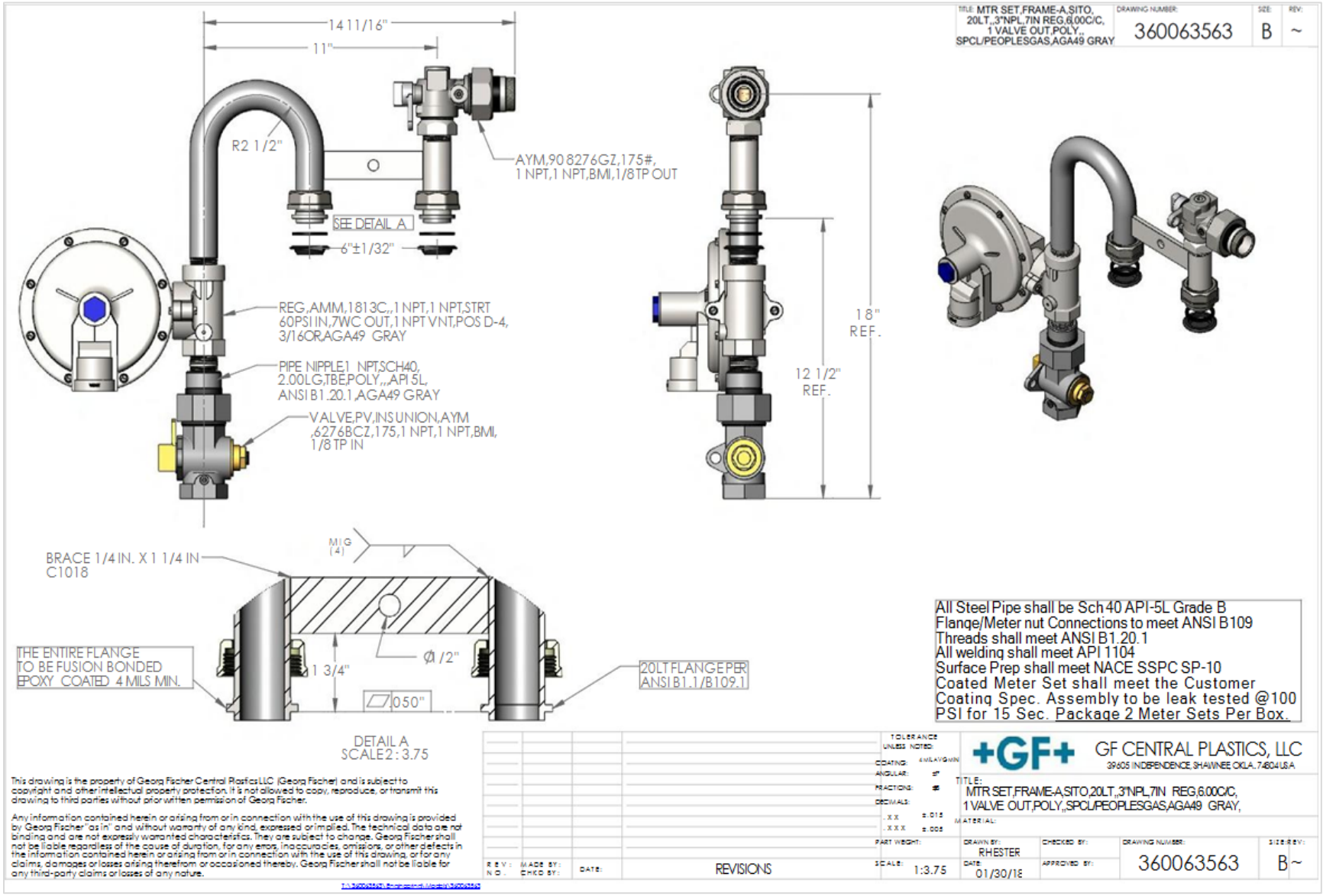
TITLE: MTR SET,FRAME-A,SITO, 20LT,,3"NPL,7IN REG,6.00C/C, 1 VALVE OUT,POLY,,, SPCL/PEOPLESGAS,AGA49 GRAY
DRAWING NUMBER: 360063563
SIZE: B
REV: ~
14 11/16"
11"
R2 1/2"
AYM,90 8276GZ,175#, 1 NPT,1 NPT,BMI,1/8TP OUT
SEE DETAIL A
6"±1/32"
REG,,AMM,1813C,,1 NPT,1 NPT,STRT 60PSI IN,7WC OUT,1 NPT VNT,POS D-4, 3/16OR,AGA49 GRAY
PIPE NIPPLE,1 NPT,SCH40, 2.00LG,TBE,POLY,,,API 5L, ANSI B1.20.1,AGA49 GRAY
VALVE,PV,INS UNION,AYM ,6276BCZ,175,1 NPT,1 NPT,BMI, 1/8 TP IN
18" REF.
12 1/2" REF.
BRACE 1/4 IN. X 1 1/4 IN C1018
MIG (4)
THE ENTIRE FLANGE TO BE FUSION BONDED EPOXY COATED 4 MILS MIN.
1 3/4"
Ø1/2"
.050"
20LT FLANGE PER ANSI B1.1/B109.1
DETAIL A
SCALE 2 : 3.75
All Steel Pipe shall be Sch 40 API-5L Grade B
Flange/Meter nut Connections to meet ANSI B109
Threads shall meet ANSI B1.20.1
All welding shall meet API 1104
Surface Prep shall meet NACE SSPC SP-10
Coated Meter Set shall meet the Customer Coating Spec. Assembly to be leak tested @100 PSI for 15 Sec. Package 2 Meter Sets Per Box.
TOLERANCE UNLESS NOTED:
COATING: 4 MILAVG MIN
ANGULAR: ±1°
FRACTIONS: 1/16
DECIMALS: .XX ±.015 .XXX ±.005
MATERIAL:
PART WEIGHT:
SCALE: 1:3.75
+GF+ GF CENTRAL PLASTICS, LLC
39605 INDEPENDENCE, SHAWNEE, OKLA. 74804 USA
TITLE: MTR SET,FRAME-A,SITO,20LT,,3"NPL,7IN REG,6.00C/C, 1 VALVE OUT,POLY,,SPCL/PEOPLESGAS,AGA49 GRAY,
DRAWN BY: RHESTER
CHECKED BY:
DRAWING NUMBER: 360063563
SIZE/REV: B ~
DATE: 01/30/18
APPROVED BY:
REV: NO.
MADE BY:
CHKD BY:
DATE:
REVISIONS
This drawing is the property of Georg Fischer Central Plastics LLC (Georg Fischer) and is subject to copyright and other intellectual property protection. It is not allowed to copy, reproduce, or transmit this drawing to third parties without prior written permission of Georg Fischer.
Any information contained herein or arising from or in connection with the use of this drawing is provided by Georg Fischer "as in" and without warranty of any kind, expressed or implied. The technical data are not binding and are not expressly warranted characteristics. They are subject to change. Georg Fischer shall not be liable regardless of the cause of duration, for any errors, inaccuracies, omissions, or other defects in the information contained herein or arising from or in connection with the use of this drawing, or for any claims, damages or losses arising therefrom, or occasioned thereby. Georg Fischer shall not be liable for any third-party claims or losses of any nature.

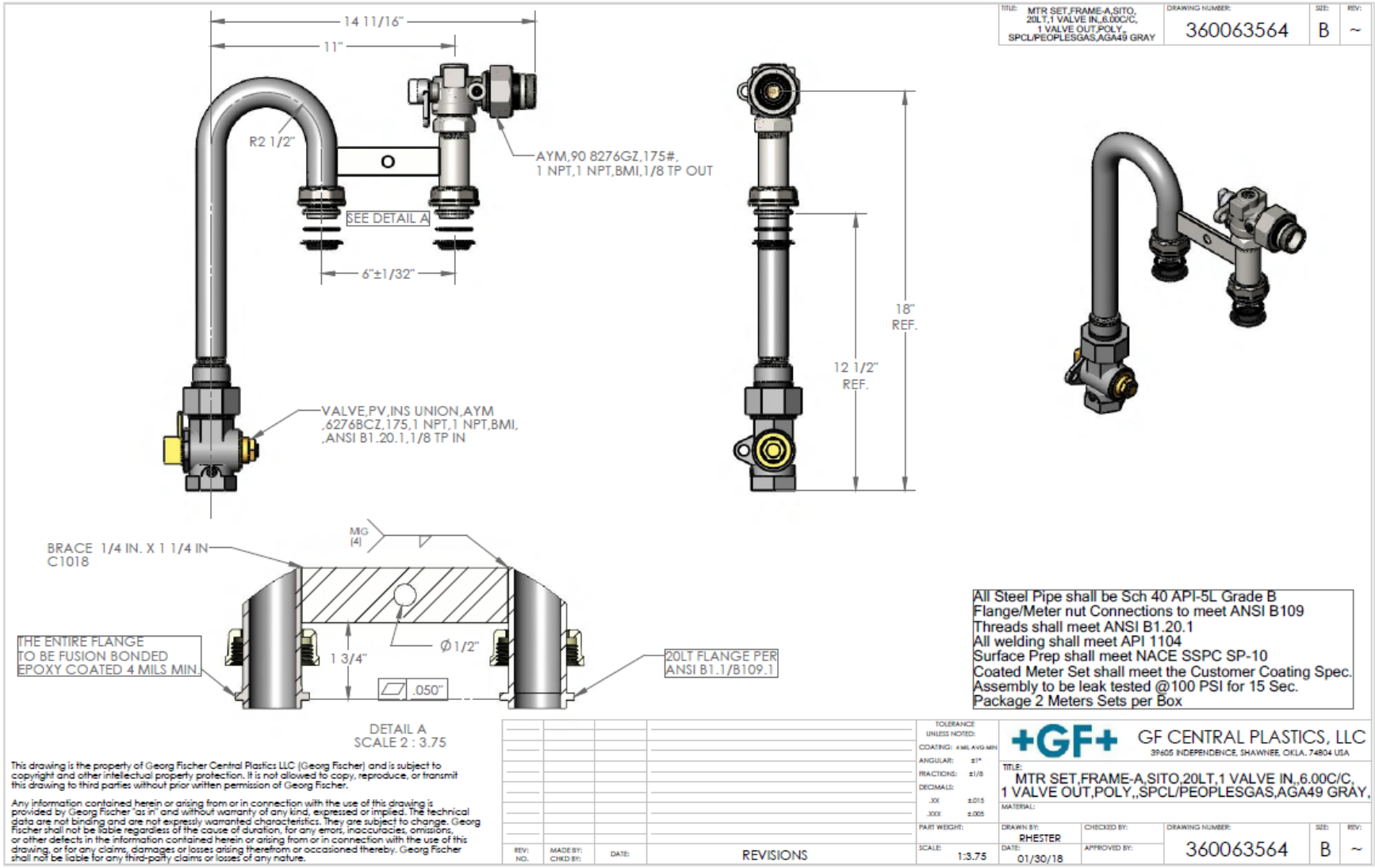
14 11/16"
11"
R2 1/2"
AYM,90 8276GZ,175#,
1 NPT,1 NPT,BMI,1/8 TP OUT
SEE DETAIL A
6"±1/32"
18"
REF.
12 1/2"
REF.
VALVE,PV,INS UNION,AYM
,6276BCZ,175,1 NPT,1 NPT,BMI,
,ANSI B1.20.1,1/8 TP IN
BRACE 1/4 IN. X 1 1/4 IN
C1018
MIG
(4)
THE ENTIRE FLANGE
TO BE FUSION BONDED
EPOXY COATED 4 MILS MIN.
1 3/4"
Ø1/2"
.050"
20LT FLANGE PER
ANSI B1.1/B109.1
DETAIL A
SCALE 2 : 3.75
All Steel Pipe shall be Sch 40 API-5L Grade B
Flange/Meter nut Connections to meet ANSI B109
Threads shall meet ANSI B1.20.1
All welding shall meet API 1104
Surface Prep shall meet NACE SSPC SP-10
Coated Meter Set shall meet the Customer Coating Spec.
Assembly to be leak tested @100 PSI for 15 Sec.
Package 2 Meters Sets per Box
TITLE: MTR SET,FRAME-A,SITO, 20LT,1 VALVE IN,,6.00C/C, 1 VALVE OUT,POLY,, SPCL/PEOPLESGAS,AGA49 GRAY
DRAWING NUMBER: 360063564
SIZE: B
REV: ~
+GF+ GF CENTRAL PLASTICS, LLC
39605 INDEPENDENCE, SHAWNEE, OKLA. 74804 USA
TITLE: MTR SET,FRAME-A,SITO,20LT,1 VALVE IN,,6.00C/C, 1 VALVE OUT,POLY,,SPCL/PEOPLESGAS,AGA49 GRAY,
MATERIAL:
DRAWN BY: RHESTER
DATE: 01/30/18
CHECKED BY:
APPROVED BY:
SCALE: 1:3.75
REVISIONS
This drawing is the property of Georg Fischer Central Plastics LLC (Georg Fischer) and is subject to copyright and other intellectual property protection. It is not allowed to copy, reproduce, or transmit this drawing to third parties without prior written permission of Georg Fischer.
Any information contained herein or arising from or in connection with the use of this drawing is provided by Georg Fischer "as in" and without warranty of any kind, expressed or implied. The technical data are not binding and are not expressly warranted characteristics. They are subject to change. Georg Fischer shall not be liable regardless of the cause of duration, for any errors, inaccuracies, omissions, or other defects in the information contained herein or arising from or in connection with the use of this drawing, or for any claims, damages or losses arising therefrom or occasioned thereby. Georg Fischer shall not be liable for any third-party claims or losses of any nature.

Appendix 7

Welding Guidelines

Welder Qualification Policy

(Residential Pipelines)

Welder Qualifications

All welded natural gas service lines installations must meet the requirements of the Code of Federal Regulations; Title 49, Part 192- “Transportation of Natural and Other Gas by Pipeline: Minimum Federal Safety Standards”. To so comply, any welding performed as a part of such installation must be performed only by welders that are Operator Qualified in the manner set forth in Section 192.227 and subject to the limitations set forth in Section 192.229 of the above.

If any portion of the Customer’s Service Line has been joined by the welding process, the customer or installer must indicate on the Request for Service Form that the welder has been certified and Operator Qualified, prior to welding, according to the requirements set forth in this Appendix.

All welders, welding gas lines up to 60 PSIG M.A.O.P. must be certified once per calendar year not to exceed 15 months.

However, a welder may not weld on pipe to be operated at a pressure that produces a hoop stress of 20 percent or more of SMYS unless within the preceding 6 calendar months the welder has had one weld tested and found acceptable under the sections 6 or 9 of API Standard 1104 (incorporated by reference, see §192.7). Alternatively, welders may maintain an ongoing qualification status by performing welds tested and found acceptable under the above acceptance criteria at least twice each calendar year, but at intervals not exceeding 71/2 months. A welder qualified under an earlier edition of a standard listed in §192.7 of this part may weld but may not re-qualify under that earlier edition.

The Company will, upon request, supply the names of the testing agencies which it has approved to administer qualification tests. Arrangements for such tests must be made directly with the testing agency by the installer or person desiring such qualification test. The testing agency will inform the Company of all certifications made through its qualification testing, and such information must include the following:

i. Welder’s Name
ii. Social Security Number
iii. Testing Agency
iv. Date Tested
v. Test Witness
vi. Welding Process (SMAW, LH, GMAW)
vii. Test Method Peoples Natural Gas Service Line Installation Standards

Welders qualified by the testing agency will be furnished an identification card by the agency, attesting to their certification. Welders will make this card available for inspection by a representative of the Company on request.

The welder's card must show that he is qualified to weld pipe and what welding procedure he is qualified to use. These tests would be recorded on his card.

i. The welder's card must state that he has qualified in welding steel pipe not plate.
ii. The welder's card must show what welding procedure he is qualified to use. These tests must be recorded on his card.

A card issued by any recognized testing agency will be honored if the test given meets the requirements specified.

Approved Qualifying Agency:

Team Industrial Services, Inc.
4525 Campbell's Run Road
Pittsburgh, Pennsylvania 15205
412-787-8690